15W0132B151

SINUS S

Overhead crane – Gantry and Trolley control
Parameter setting using the keypad
R.00 30/03/2022

Summary

1. Description 1

1.1. Installation 1

2. Wiring 3

3. Parameter setting using the keypad 4

3.1. Anti-sway 4

1. Description

This guide proposes a Gantry and Trolley control for an Overhead crane with two parallel motors, two-speed forward reverse control and holding brake.

The use of dedicated thermoswitches for the protection of the single motor is suggested.

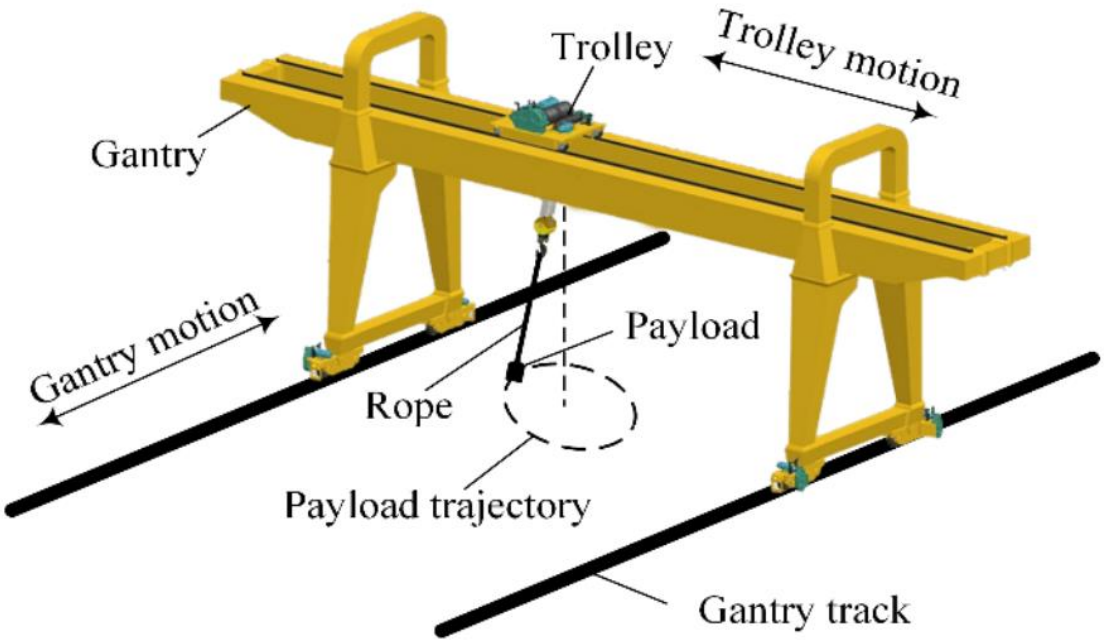

Figure 1

1.1. Installation

Refer to the Sinus S Power Unit Manual **15P0132B100** for inverter dimensioning, cable sections, tightening torques, safety, etc.
Refer to the Sinus S Accessories Manual **15W0132B100** for the choice of the braking resistor.

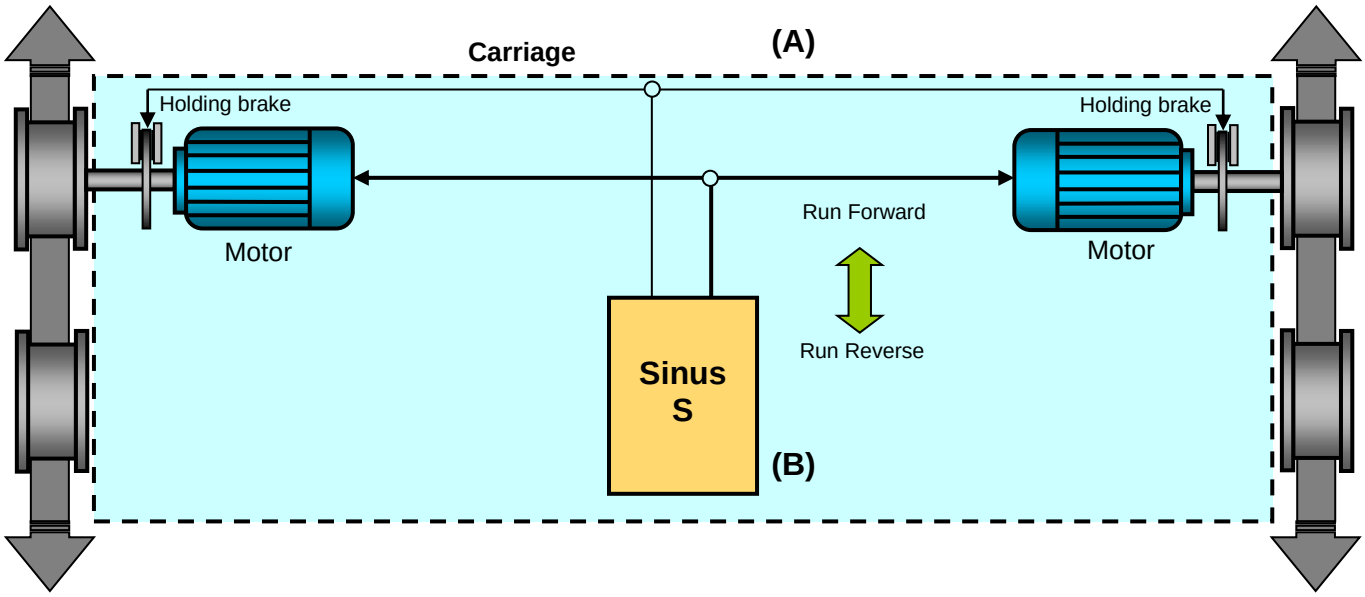

Figure 2

Side view

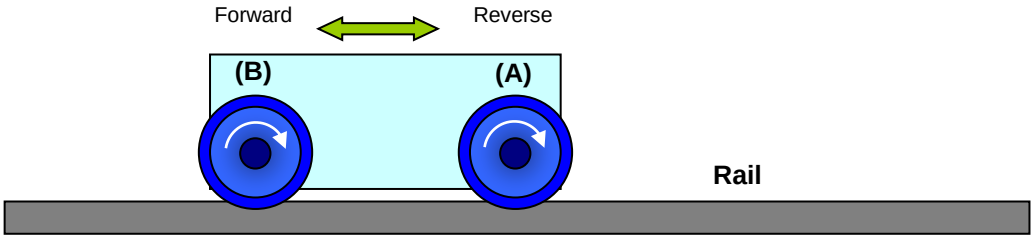

Figure 3

2. Wiring

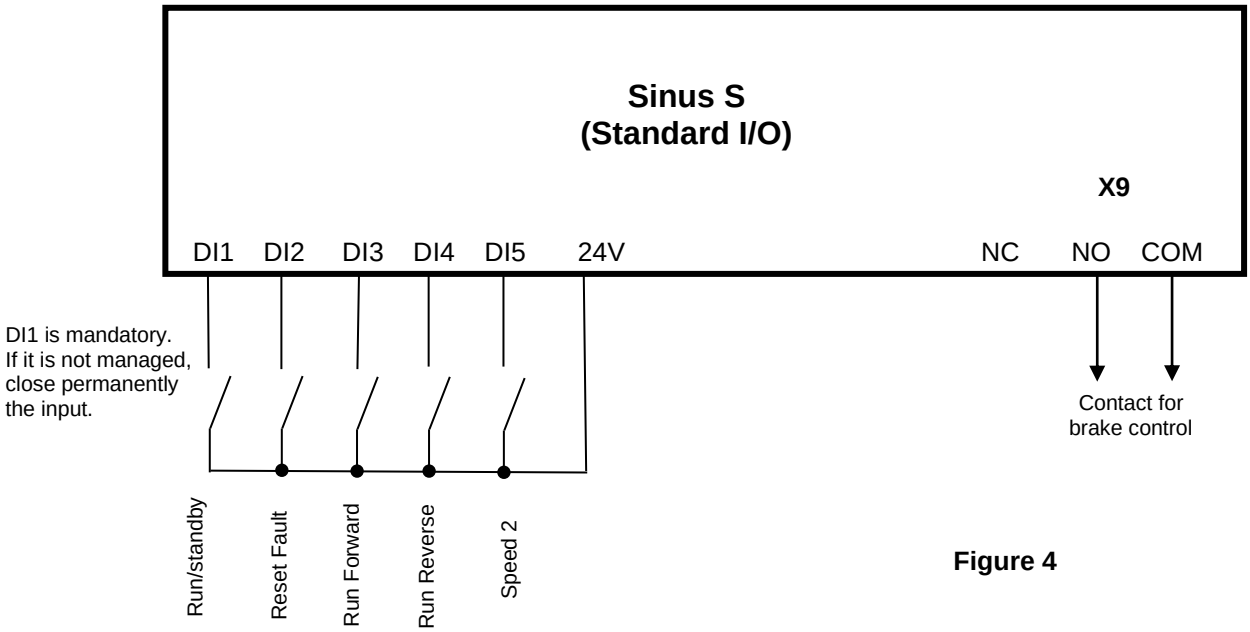

Figure 4

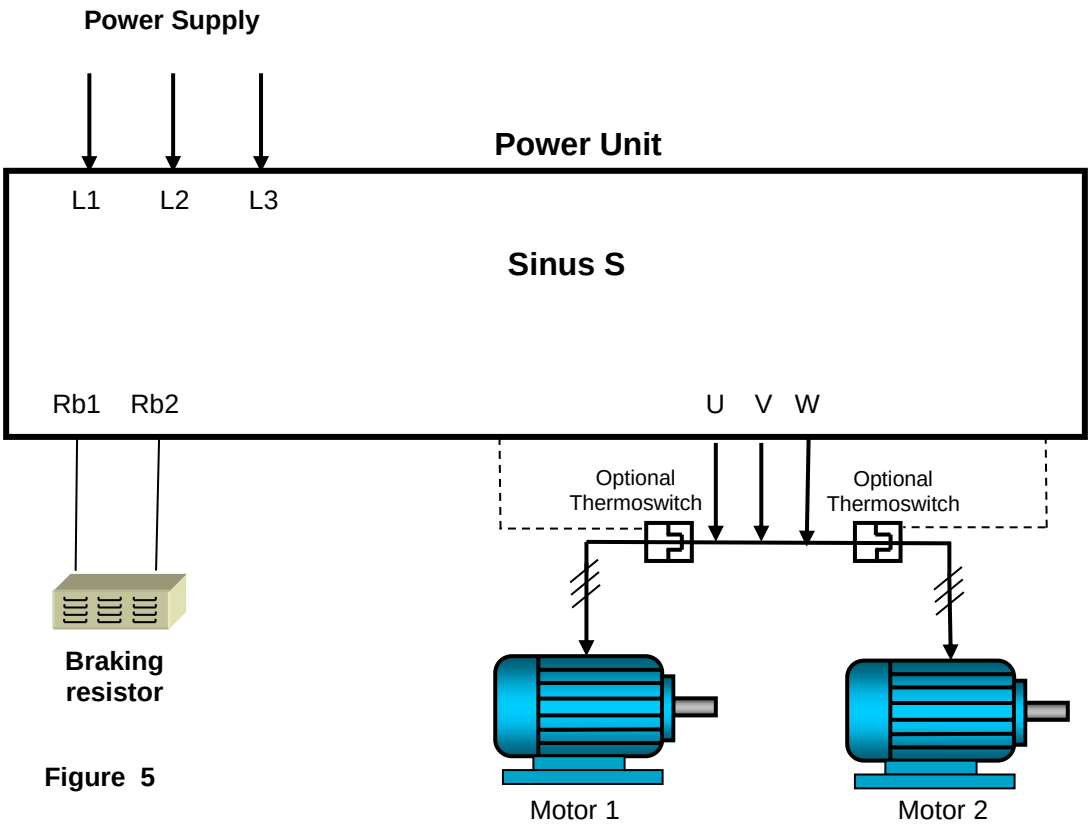

Figure 5

3. Parameter setting using the keypad

The parameters are to be considered as an example, they are not presumed to be valid for any similar application.

P208:01	Rated mains voltage	[1] 400 Veff
P210:00	Min frequency	20.0 Hz – 1st speed – example
P211:00	Max frequency	50.0 Hz – maximum frequency
P320:05	Rated frequency	50 Hz – rated motor frequency
P323:00	Rated motor current	…
P400:13	Reverse rotation	[0] Not connected
P400:08	RUN forward	[13] DI3
P400:18	Activate preset (bit 0)	[0] Not connected
P400:09	RUN reverse	[14] DI4
P450:02	Preset 2	50.0 Hz – 2nd speed – example
P706:01	operating mode	[0] Brake resistor
P420:01	Relay function	[50] Running
P220:00	Acceleration time 1	3 s – example
P221:00	Deceleration time 1	3 s – example

At the end of the modifications it is necessary to save the programming by keeping the [enter] key pressed for a few seconds until the message SAVING appears.

For more details see the Sinus S Programming Manual **15R0132B100**.

3.1. Anti-sway

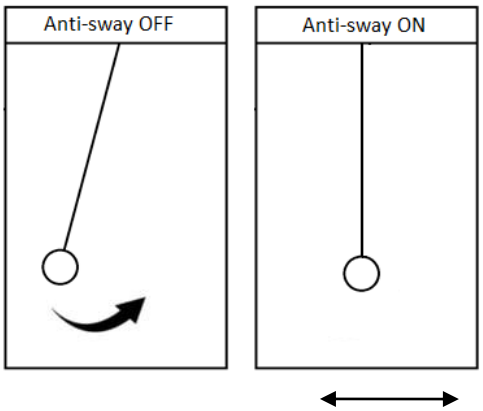

This optional function allows suppressing overhead load swaying from applications such as bridge cranes.
A fully open-loop algorithm is used, which does not require any additional sensors or boards.
The drive changes the speed reference to suppress swaying.

The Anti-sway function is activated through parameter **P799:01** (Anti-sway control: Activation).
Parameter **P799:02** (Anti-sway control: Rope Length) allows setting the maximum rope length in meters. It is important to set the maximum rope length achieved during operations.
Additional settings can be made through parameter **P799:03** (Anti-sway control: Friction Coefficient).

For optimum performance, make sure that all S-Ramp are disabled when using the Anti-sway function. See parameter 0x291E:001 (**P226.01**).