• 15P0071B1 •

ASA

SOFT STARTERS

ADDENDUM TO THE INSTALLATION AND PROGRAMMING INSTRUCTIONS

Issued on 25/11/08
R02_AD01

English

• This manual is integrant and essential to the product. Carefully read the instructions contained herein as they provide important hints for use and maintenance safety.
• This device is to be used only for the purposes it has been designed to. Other uses should be considered improper and dangerous. The manufacturer is not responsible for possible damages caused by improper, erroneous and irrational uses.
• Elettronica Santerno is responsible for the device in its original setting.
• Any changes to the structure or operating cycle of the device must be performed or authorized by the Engineering Department of Elettronica Santerno.
• Elettronica Santerno assumes no responsibility for the consequences resulting by the use of non-original spare-parts.
• Elettronica Santerno reserves the right to make any technical changes to this manual and to the device without prior notice. If printing errors or similar are detected, the corrections will be included in the new releases of the manual.
• Elettronica Santerno is responsible for the information contained in the original version of the Italian manual.
• The information contained herein is the property of Elettronica Santerno and cannot be reproduced. Elettronica Santerno enforces its rights on the drawings and catalogues according to the law.

SANTERNO
GRUPPO CARRARO

Elettronica Santerno S.p.A.
Strada Statale Selice, 47 - 40026 Imola (BO) Italy
Tel. +39 0542 489711 - Fax +39 0542 489722
www.elettronicasanterno.com sales@elettronicasanterno.it

0. TABLE OF CONTENTS

0. TABLE OF CONTENTS 2
1. OVERVIEW 3
3.3 Fuses 3
7.4. Operation 5

1. OVERVIEW

This Addendum covers additional information about protection fuses and status/diagnostics LEDs.

Fuses are covered in section 3.3 below (the section number is the same as in latest Rev. 2 of the ASA User Manual).

LEDs are covered in section 7.4 below (the section number is the same as in latest Rev.2 of the ASA User Manual).

3.3 Fuses

ASA can be installed with fuses to protect the soft starter and to provide Type 1 or Type 2 protection. HRC fuses can be used for Type 1 coordination.

The fuse classes mentioned in the table below conform to the following UL standards:

- Class J fuses conform to UL 248-8;
- Class L fuses conform to UL 248-10.

Maximum Fuse Sizes

The maximum fuse sizes for ASA-0018 ~ASA-0897 at 600 VAC are (values in amperes):

	Type 2 short circuit protection	Type 1 short circuit protection (HRC fuses)	
	Class J HSJ fuse (High Speed fuse)	Class J or Class L time delay fuse	Class J or Class L non-time delay fuse
ASA-0018	**40	45	80
ASA-0047	**110	100	200
ASA-0067	**125	150	300
ASA-0088	**175	200	350
ASA-0125	225	300	500
ASA-0141	**250	350	600
ASA-0238	**450	600	900
ASA-0253	**450	600	1000
ASA-0405	-	900	1600
ASA-0513	-	1200	2000
ASA-0585	-	1350	2500
ASA-0628	-	1400	2500
ASA-0775	-	1800	2500
ASA-0897	-	2000	3000

** Two series-connected fuses required per phase.

Semiconductor Fuses

Semiconductor fuses can be used for Type 2 coordination and to reduce the risk of damage to SCRs from transient overload currents.

- **Semiconductor fuses conform to UL 248-13.**

Suitable **Bussmann** semiconductor fuses are detailed below.

F Series Fuses (British Round Body Style)

	Supply Voltage ≤ 415 VAC	Supply Voltage ≤ 525 VAC	Supply Voltage ≤ 575 VAC	Supply Voltage ≤ 695 VAC	SCR I^2t
ASA-0018	63AFE	63AFE	63AFE	63AFE	1,150
ASA-0047	200FM	180FM	180FM	180FM	18,000
ASA-0067	200FM	180FM	180FM	180FM	15,000
ASA-0088	250FM	250FM	250FM	250FM	51,200
ASA-0125	250FM	250FM	250FM	250FM	97,000
ASA-0141	280FM	280FM	280FM	280FM	97,000
ASA-0238	630FMM	630FMM	630FMM	630FMM	320,000
ASA-0253	630FMM	630FMM	630FMM	630FMM	320,000
ASA-0405	630FMM	630FMM	630FMM	630FMM	320,000
ASA-0513	700FMM	700FMM	700FMM	700FMM	781,000
ASA-0585	*500FMM	*500FMM	*500FMM	*500FMM	1,200,000
ASA-0628	*500FMM	*500FMM	*500FMM	*500FMM	1,200,000
ASA-0775	*700FMM	*700FMM	*700FMM	*700FMM	2,532,000
ASA-0897	-	-	-	-	4,500,000
ASA-1153	-	-	-	-	4,500,000
ASA-1403	-	-	-	-	6,480,000
ASA-1574	-	-	-	-	12,500,000

* Two parallel-connected fuses required per phase.

170M Fuses (European Square Body Style)

	Supply Voltage ≤ 415 VAC	Supply Voltage ≤ 525 VAC	Supply Voltage ≤ 575 VAC	Supply Voltage ≤ 695 VAC	SCR I^2t
ASA-0018	170M1315	170M1314	170M1314	170M1314	1,150
ASA-0047	170M1319	170M1318	170M1318	170M1318	18,000
ASA-0067	170M1319	170M1318	170M1318	170M1318	15,000
ASA-0088	170M3017	170M3017	170M3017	170M3017	51,200
ASA-0125	170M1322	170M1322	170M1322	170M1322	97,000
ASA-0141	170M1322	170M1322	170M1322	170M1322	97,000
ASA-0202	170M6141	170M6141	170M6141	170M6141	245,000
ASA-0238	170M3023	170M3023	170M3023	170M3023	320,000
ASA-0253	170M3023	170M3023	170M3023	170M3023	320,000
ASA-0405	170M6012	170M4016	170M6011	170M6011	320,000
ASA-0513	170M6014	170M6014	170M4018	170M4018	781,000
ASA-0585	170M5017	170M6015	170M6014	170M6014	1,200,000
ASA-0628	170M6019	170M6018	170M6017	170M6017	1,200,000
ASA-0775	170M6019	170M6018	170M6017	170M6017	2,532,000
ASA-0897	170M6020	170M6019	170M6151	170M6151	4,500,000
ASA-1153	170M6020	170M6019	170M6151	170M6151	4,500,000
ASA-1403	170M6021	170M6021	*170M5018	*170M5018	6,480,000
ASA-1574	*170M6018	*170M6018	*170M5018	*170M5018	12,500,000

* Two parallel-connected fuses required per phase.

7.4. Operation

Once installed, wired and programmed according to the instructions earlier in this manual, the ASA can be operated.

Local Control Panel

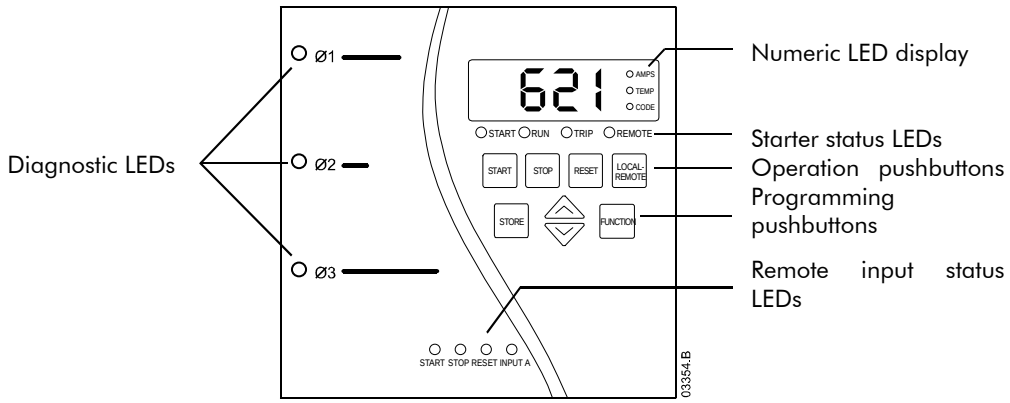

- Numeric LED display

The display consists of a numeric information area and three LEDs to the right. During operation, the display can show either motor current (amperes) or the motor temperature (calculated by the soft starter and shown as a percentage of the motor's thermal capacity). The LEDs at the right of the display indicate which information is being shown. Use the <UP> and <DOWN> pushbuttons to select current or temperature display.

- If the motor current exceeds the display area, the display will show dashes – – –.
- If the soft starter trips, the Code LED will activate and the display will show the appropriate trip code.
- When the ASA is in Programming Mode, all display LEDs are on.
- If the Amps or Temp LED is flashing while the ASA is stopped, the soft starter is waiting for the restart delay to elapse (refer to Function 32 for details).

- Starter status LEDs

Start: Voltage is being applied to the motor terminals.

Run: Full voltage is being applied to the motor terminals.

Trip: The ASA has tripped.

Remote: The ASA is in remote control mode.

If the Start and Run LEDs are both flashing while the ASA is running, the soft starter is operating under auto-stop control. The soft starter will continue to run for the time selected in Function 13 *Auto-Stop Run Time*.

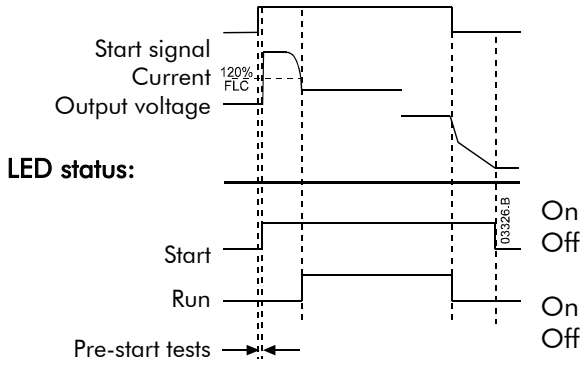

- **Operation pushbuttons**

These pushbuttons can be used to control the ASA in local control mode. The **LOCAL/REMOTE** pushbutton can be used to switch between local and remote control modes.

NOTE
When control power is applied, the ASA may be in either local or remote control mode depending on the mode it was in when control power was removed. The factory default is local control.

NOTE
Function 20 *Local/Remote Operation* can be used to limit operation to either local or remote mode operation. If the **LOCAL/REMOTE** pushbutton is pressed, the numeric display will show 'OFF'.

NOTE
Simultaneously pressing the **STOP** and **RESET** pushbuttons causes the ASA to immediately remove voltage from the motor, resulting in a coast to stop. Any soft stop settings are ignored.

- **Programming pushbuttons**

Refer to Programming Procedure.

- **Remote input status LEDs**

These LEDs indicate the state of the circuits across the ASA remote control inputs, in both local and remote control modes.

NOTE
All LEDs and the Numeric Display are illuminated for approximately one second to test their operation when control power is first applied.

- **Diagnostic LEDs**

The diagnostic LEDs indicate the voltage across the SCRs on each phase of the soft starter. The LEDs should be brightly lit when the soft starter is powered up but not running, and should gradually fade to off while the ASA is performing a soft start.

If the LEDs are not behaving as expected, or if one LED is behaving differently from the other two, this helps identify which phase may be faulty.

Each LED relates to the input phases as follows:

LED	ASA-0018 ~ ASA-0253	ASA-0302 ~ ASA-1574
Ø1	L3	L1
Ø2	L2	L2
Ø3	L1	L3

Remote Control

ASA operation can be controlled via the remote control inputs when the soft starter is in remote mode. Use the **LOCAL/REMOTE** pushbutton to switch between local and remote modes. Refer to *Control Wiring* for further detail.

Restart Delay

Function 32 *Restart Delay* sets the minimum period between the end of a stop and the beginning of the next start. During the restart delay period a LED to the right of the numeric display will flash, indicating that a restart cannot be attempted yet.

Pre-Start Tests

Before applying voltage to the motor when a start is initiated, the ASA first performs a series of tests to check the motor connection and supply conditions.

Secondary Motor Settings

ASA starters can be programmed with parameter sets for two motors. The primary motor settings are adjusted using Functions 1 ~ 9. The secondary motor settings are adjusted using Functions 80 ~ 88.
Programmable Input A can be used to select between the two function sets. Refer to Function 24 *Input A Functionality* for further detail.

Auto-Stop Short-Cut

A short-cut allows fast access to the auto-stop function (Function 13).

1. Press the **<STOP>** and **<FUNCTION>** pushbuttons at the same time. This enters Programming Mode and displays the value of Function 13 *Auto-Stop Run Time*.
2. Use the <**UP**> and <**DOWN**> pushbuttons to set the run time.
3. To store the new run time, press the **<STOP>** and **<FUNCTION>** pushbuttons together. The new setting will be saved and Programming Mode will close.

When a start is next initiated the ASA will run for the prescribed time. While running under in auto-stop, the Start and Run LEDs will both flash.