•15P0073B1•

SINUS M

VARIABLE FREQUENCY DRIVE

USER MANUAL

-Installation and Programming Instructions-

Issued on 17/02/11
R.03.1
SW Ver. EU2.3

English

- This manual is integrant and essential to the product. Carefully read the instructions contained herein as they provide important hints for use and maintenance safety.
- This device is to be used only for the purposes it has been designed to. Other uses should be considered improper and dangerous. The manufacturer is not responsible for possible damages caused by improper, erroneous and irrational uses.
- **Enertronica Santerno S.p.A. is responsible for the device in its original setting.**
- Any changes to the structure or operating cycle of the device must be performed or authorized by the Engineering Department of Enertronica Santerno S.p.A..
- Enertronica Santerno S.p.A. assumes no responsibility for the consequences resulting by the use of non-original spare-parts.
- Enertronica Santerno S.p.A. reserves the right to make any technical changes to this manual and to the device without prior notice. If printing errors or similar are detected, the corrections will be included in the new releases of the manual.
- Enertronica Santerno S.p.A. is responsible for the information contained in the original version of the Italian manual.
- The information contained herein is the property of Enertronica Santerno S.p.A. and cannot be reproduced. Enertronica Santerno S.p.A. enforces its rights on the drawings and catalogues according to the law.

ENERTRONICA SANTERNO

Enertronica Santerno S.p.A.
Via della Concia, 7 - 40023 Castel Guelfo (BO) Italia
Tel. +39 0542 489711 - Fax +39 0542 489722
santerno.com info@santerno.com

Thank you for purchasing ES Variable Frequency Drives!

SAFETY INSTRUCTIONS

- Always follow safety instructions to prevent accidents and potential hazards from occurring.
- In this manual, safety messages are classified as follows:

⚠ **WARNING**	Improper operation may result in serious personal injury or death.
⚠ **CAUTION**	Improper operation may result in slight to medium personal injury or property damage.

- Throughout this manual, the following pictograms are used to make you aware of safety considerations:

⚠	Identifies potential hazard under certain conditions. Read the message and follow the instructions carefully.
⚠	Identifies shock hazard under certain conditions. Particular attention should be paid because dangerous voltage may be present.

- Keep operating instructions handy for quick reference.
- Read this manual carefully to maximize the performance of Sinus M series inverters and ensure safe usage.

⚠ WARNING

- **Do not remove the inverter cover while power is applied or the unit is operating.**
  Otherwise, electric shock could occur.
- **Do not run the inverter with the front cover removed.**
  Otherwise, you may get an electric shock due to high voltage terminals or charged capacitor exposure.
- **Do not remove the cover except for periodic inspections or wiring, even if the input power is not applied.**
  Otherwise, you may access the charged circuits and get an electric shock.

- **Wiring and periodic inspections should be performed at least 10 minutes after disconnecting the input power and after checking the DC link voltage is discharged with a meter (below DC 30V).**
  Otherwise, you may get an electric shock.

- **Operate the switches with dry hands.**
  Otherwise, you may get an electric shock.

- **Do not use the cable when its insulating tube is damaged.**
  Otherwise, you may get an electric shock.

- **Do not subject the cables to scratches, excessive stress, heavy loads or pinching.**
  Otherwise, you may get an electric shock.

⚠ CAUTION

- **Install the inverter on a non-flammable surface. Do not place flammable material nearby.**
  Otherwise, fire could occur.

- **Disconnect the input power if the inverter gets damaged.**
  Otherwise, it could result in a secondary accident and fire.

- **After the input power is applied or removed, the inverter will remain hot for a couple of minutes.**
  Otherwise, you may get bodily injuries such as skin-burn or damage.

- **Do not apply power to a damaged inverter or to an inverter with parts missing even if the installation is complete.**
  Otherwise, electric shock could occur.

- **Do not allow lint, paper, wood chips, dust, metallic chips or other foreign matter to enter the drive.**
  Otherwise, fire or accident could occur.

OPERATING PRECAUTIONS

(1) Handling and installation

- ☐ Handle according to the weight of the product.
- ☐ Do not stack the inverter boxes higher than the number recommended.
- ☐ Install according to instructions specified in this manual.
- ☐ Do not open the cover during delivery.
- ☐ Do not place heavy items on the inverter.
- ☐ Check the inverter mounting orientation is correct.
- ☐ Do not drop the inverter, or subject it to impact.
- ☐ Follow your national electrical code for grounding. Recommended Ground impedance for 2S/T class (200-230V) is below 100Ω and for 4T class (380-480V) below 10Ω.
- ☐ SINUS M series contains ESD (Electrostatic Discharge) sensitive parts. Take protective measures against ESD before touching the PCB for inspection or installation.
- ☐ Use the inverter under the following environmental conditions:

Environment	Ambient temperature	- 10 ~ 50°C (non-freezing)
	Relative humidity	90% RH or less (non-condensing)
	Storage temperature	- 20 ~ 65°C
	Location	Protected from corrosive gas, combustible gas, oil mist or dust
	Altitude, Vibration	Max. 1,000m above sea level, Max. 5.9m/sec^2 (0.6G) or less
	Atmospheric pressure	70 ~ 106 kPa

(2) Wiring

- ☐ Do not connect a power factor correction capacitor, surge suppressor, or RFI filter to the output of the inverter.
- ☐ The connection orientation of the output cables U, V, W to the motor will affect the direction of rotation of the motor.
- ☐ Incorrect terminal wiring could result in the equipment damage.
- ☐ Reversing the polarity (+/-) of the terminals could damage the inverter.
- ☐ Only authorized personnel familiar with inverter should perform wiring and inspections.
- ☐ Always install the inverter before wiring. Otherwise, you may get an electric shock or have bodily injury.

(3) Trial run

- ☐ Check all parameters during operation. Changing parameter values might be required depending on the load.
- ☐ Always apply permissible range of voltage to the each terminal as indicated in this manual. Otherwise, it could lead to inverter damage.

(4) Operation precautions

- ☐ When the Auto restart function is selected, stay away from the equipment as a motor will restart suddenly after an alarm stop.
- ☐ The Stop key on the keypad is valid only when the appropriate function setting has been made. Prepare an emergency stop switch separately.
- ☐ If an alarm reset is made with the reference signal present, a sudden start will occur. Check that the reference signal is turned off in advance. Otherwise an accident could occur.
- ☐ Do not modify or alter anything inside the inverter.
- ☐ Motor might not be protected by electronic thermal function of inverter.
- ☐ Do not use a contactor on the inverter input for frequent starting/stopping of the inverter.
- ☐ Use a noise filter to reduce the effect of electromagnetic interference. Otherwise nearby electronic equipment may be affected.
- ☐ In case of input voltage unbalance, install AC reactor. Power Factor capacitors and generators may become overheated and damaged due to potential high frequency noise transmitted from inverter.
- ☐ Use an insulation-rectified motor or take measures to suppress the micro surge voltage when driving 400V class motor with inverter. A micro surge voltage attributable to wiring constant is generated at motor terminals, and may deteriorate insulation and damage motor.
- ☐ Before operating unit and prior to user programming, reset user parameters to default settings.
- ☐ Inverter can easily be set to high-speed operations, Verify capability of motor or machinery prior to operating unit.
- ☐ Stopping torque is not produced when using the DC-Brake function. Install separate equipment when stopping torque is needed.

(5) Fault prevention precautions

- ☐ Provide a safety backup such as an emergency brake which will prevent the machine and equipment from hazardous conditions if the inverter fails.

(6) Maintenance, inspection and parts replacement

- ☐ Do not conduct a megger (insulation resistance) test on the control circuit of the inverter.
- ☐ Refer to Chapter 14 for periodic inspection (parts replacement).

(7) Disposal

- ☐ Handle the inverter as an industrial waste when disposing of it.

(8) General instructions

Many of the diagrams and drawings in this instruction manual show the inverter without a circuit breaker, a cover or partially open. Never run the inverter like this. Always place the cover with circuit breakers and follow this instruction manual when operating the inverter.

Important User Information

- The purpose of this manual is to provide the user with the necessary information to install, program, start up and maintain the SINUS M series inverter.

- To assure successful installation and operation, the material presented must be thoroughly read and understood before proceeding.

- This manual contains:

Chapter	Title	Description
1	Basic information & precautions	Provides general information and precautions for safe use of the Sinus M series inverter.
2	Installation	Provides instructions on how to install the Sinus M inverter.
3	Wiring	Provides instructions on how to wire the Sinus M inverter.
4	Basic configuration	Describes how to connect the optional peripheral devices to the inverter.
5	Programming keypad	Illustrates keypad features and display.
6	Basic operation	Provides instructions for quick start of the inverter.
7	Function list	Parameter values are listed.
8	Control block diagram	Shows control flow to help users easily understand operation mode.
9	Basic functions	Provides information for basic functions in the Sinus M
10	Advanced functions	Indicates advanced functions used for system application.
11	Monitoring	Gives information on the operating status and fault information.
12	Protective functions	Outlines protective functions of the Sinus M.
13	RS 485	Provides specification of RS485 communication.
14	Troubleshooting & maintenance	Defines the various inverter faults and the appropriate action to take as well as general troubleshooting information.
15	Specifications	Gives information on Input/Output rating, control type and more details of the Sinus M inverter.
16	Options	Explains options including Remote keypad, Conduit kits, EMC filters, DB resistors.
17	EC Declaration of Conformity	Contains the Manufacturer's certification stating that the equipment is compliant to EC Directives. The certification statement also contains the technical standards applied.

Table of Contents

CHAPTER 1 - Basic information & precautions 10

1.1 Important precautions 10

1.2 Product Details 12

1.3 Product assembling & disassembling 13

CHAPTER 2 - Installation 15

2.1 Installation precautions 15

2.2 Dimensions 17

CHAPTER 3 - Wiring 21

3.1 Terminal wiring (Control I/Os) 21

3.2 Power terminal block 23

3.3 Control terminal block 26

3.4 PNP/NPN selection and connector for communication option 27

3.5 Optional External Relay 28

CHAPTER 4 - Basic configuration 29

4.1 Connection of peripheral devices to the inverter 29

4.2 Recommended MCCBs and MCs 30

4.3 Recommended Fuses and Reactors 31

CHAPTER 5 - Programming Keypad 33

5.1 Keypad features 33

5.2 Alpha-numeric view on the LED keypad 34

5.3 Moving to other groups 35

5.4 How to change the codes in a group 37

5.5 Parameter setting 39

5.6 Monitoring of operation status 42

CHAPTER 6 - Basic operation 45

6.1 Frequency Setting and Basic Operation 45

CHAPTER 7 - Function list 49

7.1 Drive group 49

7.2 Function group 1 52

7.3 Function group 2 58

7.4 I/O group 2 66

CHAPTER 8 - Control block diagram 73

8.1 Frequency and Drive mode setting 74

8.2 Accel/Decel setting and V/F control 75

CHAPTER 9 - Basic Functions 77

9.1 Frequency mode 77

9.2 Multi-Step Frequency setting 83

9.3 Operating command setting method 84

9.4 Accel/Decel time and pattern setting 88

9.5 V/F control 93

9.6 Stop method select 96
9.7 Frequency limit 97
CHAPTER 10 - Advanced functions 99
10.1 DC brake 99
10.2 Jog operation 101
10.3 UP-DOWN 103
10.4 3-Wire operation (Start – Stop via push buttons) 107
10.5 Dwell operation 108
10.6 Slip compensation 109
10.7 PID control 111
10.8 Auto-tuning 124
10.9 Sensorless Vector Control 125
10.10 Energy-saving operation 126
10.11 Speed search 127
10.12 Auto restart try 129
10.13 Operating sound select (Carrier frequency change) 130
10.14 2nd motor operation 130
10.15 Self-Diagnostics function 132
10.16 Frequency setting and 2nd drive method select 134
10.17 Over voltage trip prevention deceleration and Power Braking 136
10.18 External brake control 137
10.19 Kinetic energy buffering 138
10.20 DRAW Control 139
10.21 2 Phase PWM 141
10.22 Cooling fan control 141
10.23 Operating mode selection when cooling fan trip occurs 142
10.24 Parameter read/write 143
10.25 Parameters Restore default / Lock 144
10.26 Functions related to “Fire Mode” 147
CHAPTER 11 - Monitoring 150
11.1 Operating status monitoring 150
11.2 Monitoring the I/O terminal 153
11.3 Monitoring fault condition 154
11.4 Analog Output 156
11.5 Multi-function output terminal (MO) and Relay (3AC) 157
11.6 Output terminal select at keypad-inverter communication error 163
CHAPTER 12 - Protective functions 164
12.1 Electronic Thermal Protection 164
12.2 Overload Warning and trip 165
12.3 Stall prevention 166
12.4 Input/Output phase loss protection 168
12.5 External trip signal 169

12.6 Inverter Overload 170
12.7 Frequency command loss 170
12.8 DB Resistor Enable Duty setting 172
CHAPTER 13 - RS485 communication 173
13.1 Introduction 173
13.2 Specification 173
13.3 Installation 174
13.4 Operation 175
13.5 Communication protocol (MODBUS-RTU) 176
13.6 Communication protocol (ES BUS) 176
13.7 Parameter code list <Common area> 180
13.8 Troubleshooting 189
13.9 Miscellaneous 189
CHAPTER 14 - Troubleshooting & Maintenance 191
14.1 Protective functions 191
14.2 Fault remedy 193
14.3 Precautions for maintenance and inspection 196
14.4 Check points 196
14.5 Part replacement 196
CHAPTER 15 - Specifications 197
15.1 Temperature Derating Information 200
15.2 Inverter Efficiency and Heating Loss 201
CHAPTER 16 - Options 202
16.1 Remote option 202
16.2 Conduit Kit 205
16.3 EMC Filters 207
16.4 Braking resistors 211

CHAPTER 1 - BASIC INFORMATION & PRECAUTIONS

1.1 Important precautions

Unpacking and inspection

- Inspect the inverter for any damage that may have occurred during shipping. In order to make sure that the inverter unit is the correct one for your application, check the inverter type and output ratings on the nameplate. Also make sure that the inverter is intact.

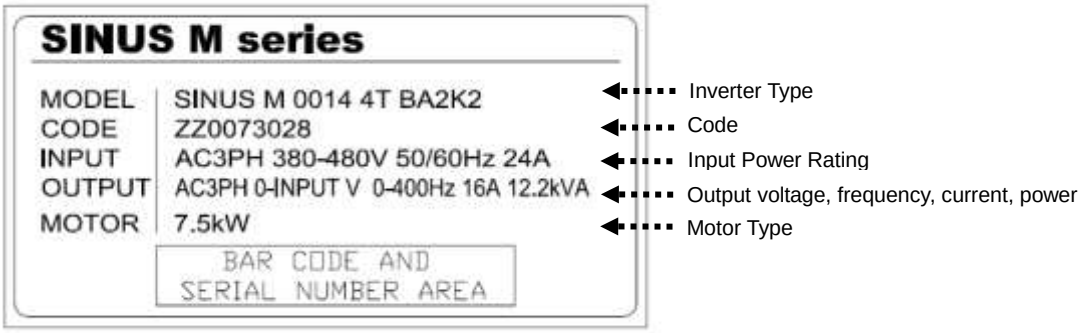

SINUS M	0001		4T		B		A2		K		2	
ENERTRONICA SANTERNO S.P.A. inverter	Motor rating*		Input power		Brake		Filter		Keypad		Enclosure	
		kW										
	0001	0.4	2S/T	1/3 phase 200-230Vac	B	B= included	A2	A2= industrial filter included	K	K= included	2	2= IP20
	0002	0.75-1.1	2S/T		B		A2		K		2	
	0003	1.5-1.8	2S/T		B		A2		K		2	
	0005	2.2-3	2S/T		B		A2		K		2	
	0007	4-4.5	2S/T		B		A2		K		2	
	0011	5.5	2S/T		B		A2		K		2	
	0014	7.5-9.2	2S/T		B		A2		K		2	
	0017	11	2S/T		B		A2		K		2	
	0020	15	2S/T		B		A2		K		2	
	0025	18.5	2S/T		B		A2		K		2	
	0030	22	2S/T		B		A2		K		2	
	0001	0.4	4T	3 phase 380-480Vac	B		A2		K		2	
	0002	0.75-0.9	4T		B		A2		K		2	
	0003	1.5	4T		B		A2		K		2	
	0005	2.2	4T		B		A2		K		2	
	0007	4.5	4T		B		A2		K		2	
	0011	5.5	4T		B		A2		K		2	
	0014	7.5	4T		B		A2		K		2	
	0017	11	4T		B		A2		K		2	
	0020	15	4T		B		A2		K		2	
	0025	18.5	4T		B		A2		K		2	
	0030	22	4T		B		A2		K		2	

* The motor power is based on 220Vac for models “2S/T” and on 380Vac for models “4T”.

If you find any difference with the equipment you ordered, or if it is damaged, please contact your sales representative.

Preparations of instruments and parts required for operation	Instruments and parts to be prepared depend on how the inverter is operated. Prepare equipment and parts as necessary.
Installation	To operate the inverter with high performance for a long time, install the inverter in a proper place in the correct direction and with proper clearances
Wiring	Connect the power supply, motor and operation signals (control signals) to the terminal block. Note that incorrect connection may damage the inverter and peripheral devices

1.2 Product Details

- Appearance

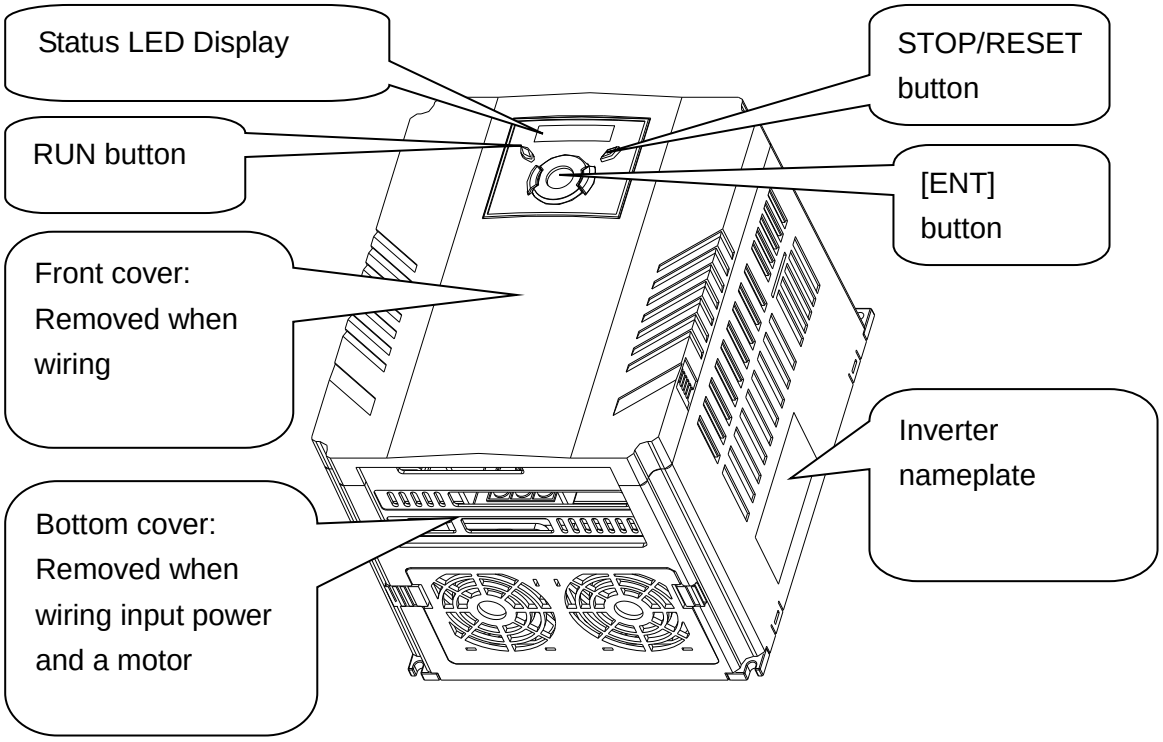

- Inside view after front cover is removed

Refer to “1.3 front cover removal” for details.

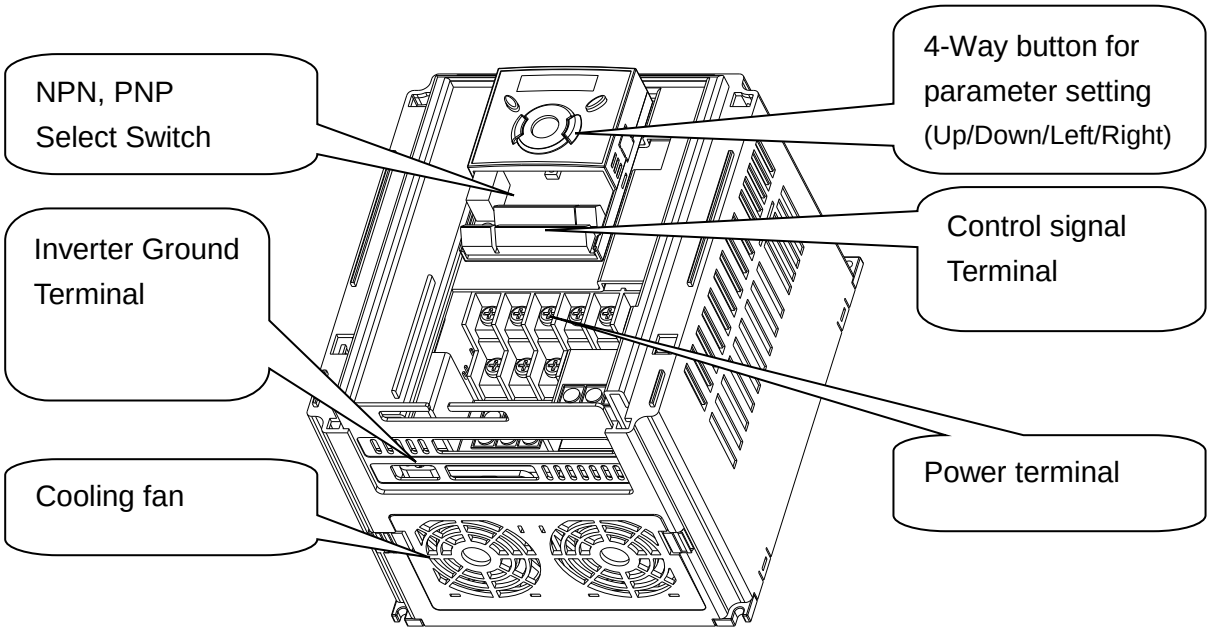

1.3 Product assembling & disassembling

- To remove the front cover: Lightly press both the indented sides of the cover and pull up.

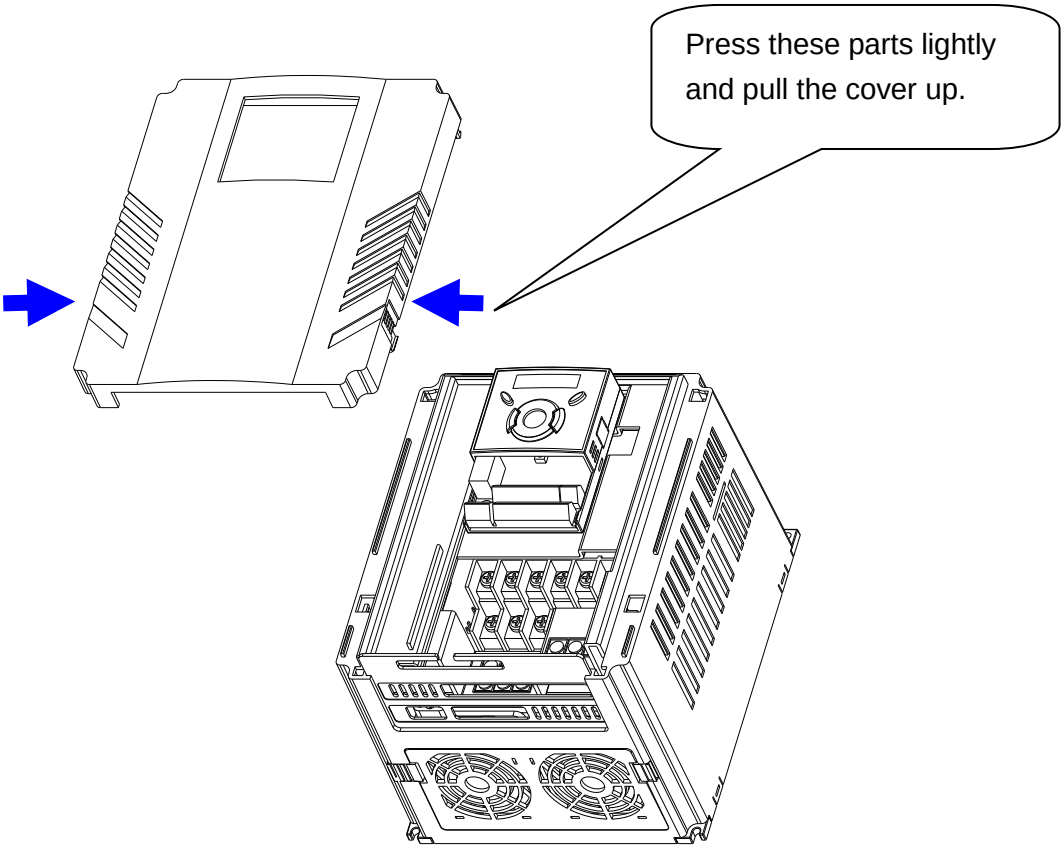

- To change the inverter fan: Press the both sides of bottom cover lightly and pull out .

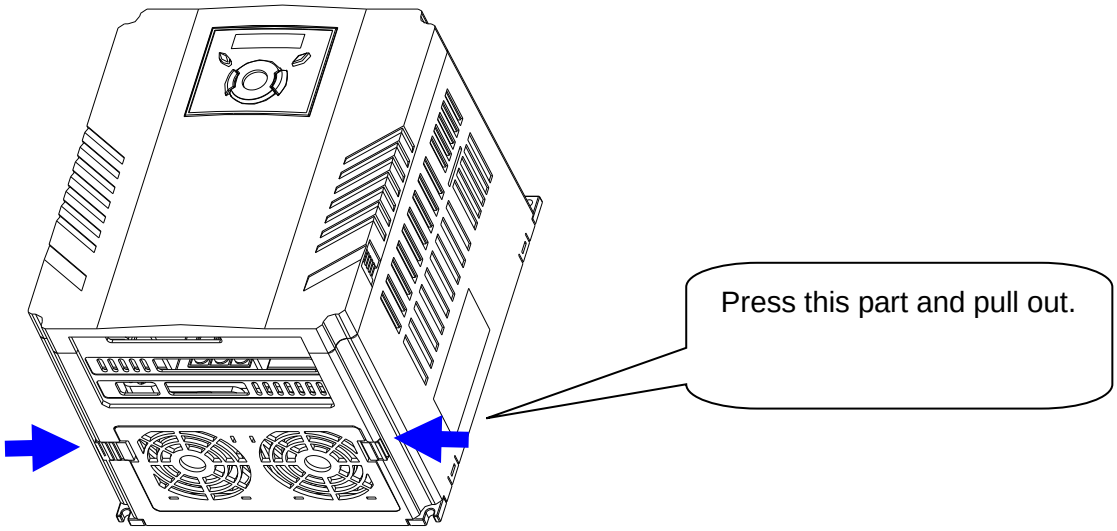

Notes:

CHAPTER 2 - INSTALLATION

2.1 Installation precautions

⚠ CAUTION

- Handle the inverter with care to prevent damage to the plastic components. Do not hold the inverter by the front cover. It may fall off.
- Install the inverter in a place where it is immune to vibration (5.9 m/s^2 or lower).
- Install in a location where temperature is within the permissible range (–10~50°C).

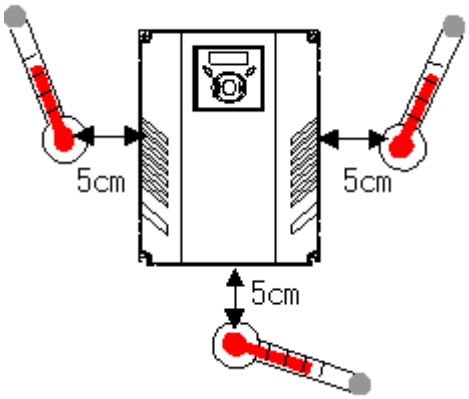

<Ambient Temp Checking Location>

- The inverter will be very hot during operation. Install it on a non-combustible surface.
- Mount the inverter on a flat, vertical and level surface. Inverter orientation must be vertical (top up) for proper heat dissipation. Also leave sufficient clearances around the inverter.

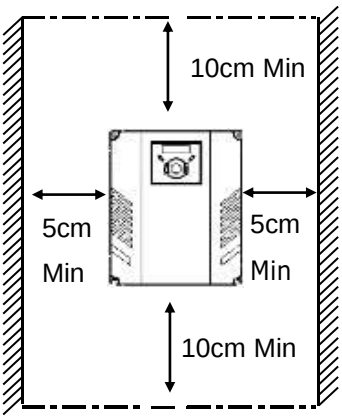

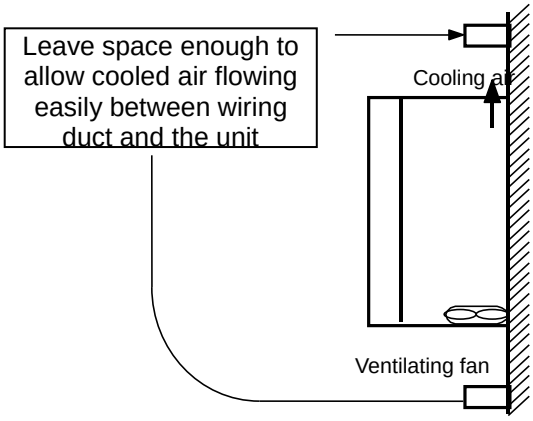

- Protect from moisture and direct sunlight.
- Do not install the inverter in any environment where it is exposed to waterdrops, oil mist, dust, etc. Install the inverter in a clean place or inside a “totally enclosed” panel any suspended matter is not entered.

- When two or more inverters are installed or a cooling fan is mounted in a panel, the inverters and fan must be installed in proper positions with extreme care to keep the ambient temperature below the permissible range.
- Install the inverter using screws or bolts to ensure that the inverter is firmly fastened.

< For installing multiple inverters in a panel>

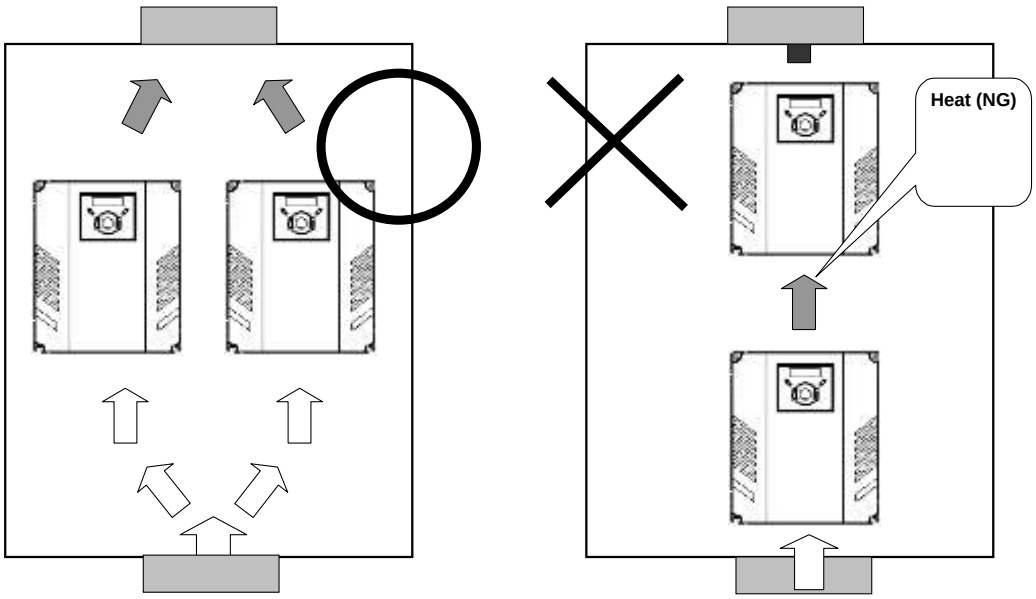

⚠ CAUTION
Take caution on proper heat ventilation when installing inverters and fans in a panel.

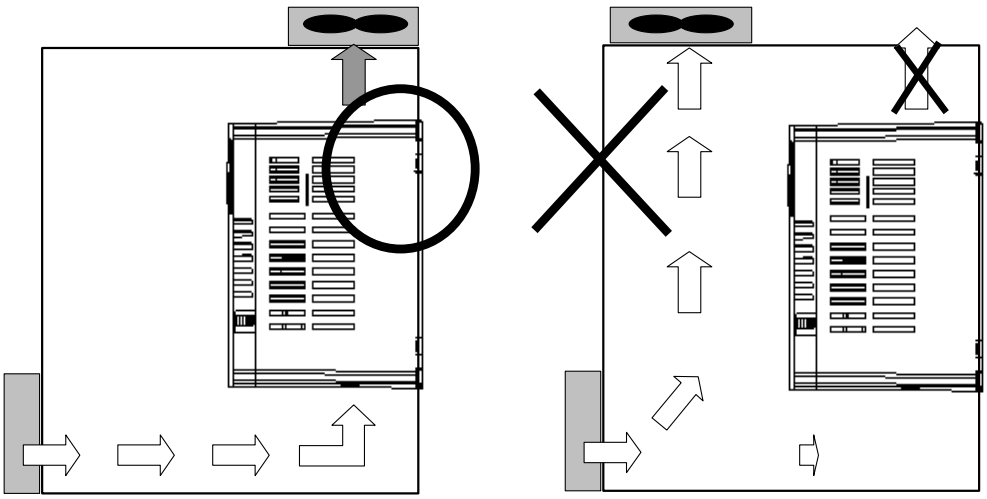

2.2 Dimensions

SINUS M 0001 2S/T - SINUS M 0002 2S/T
SINUS M 0001 4T - SINUS M 0002 4T

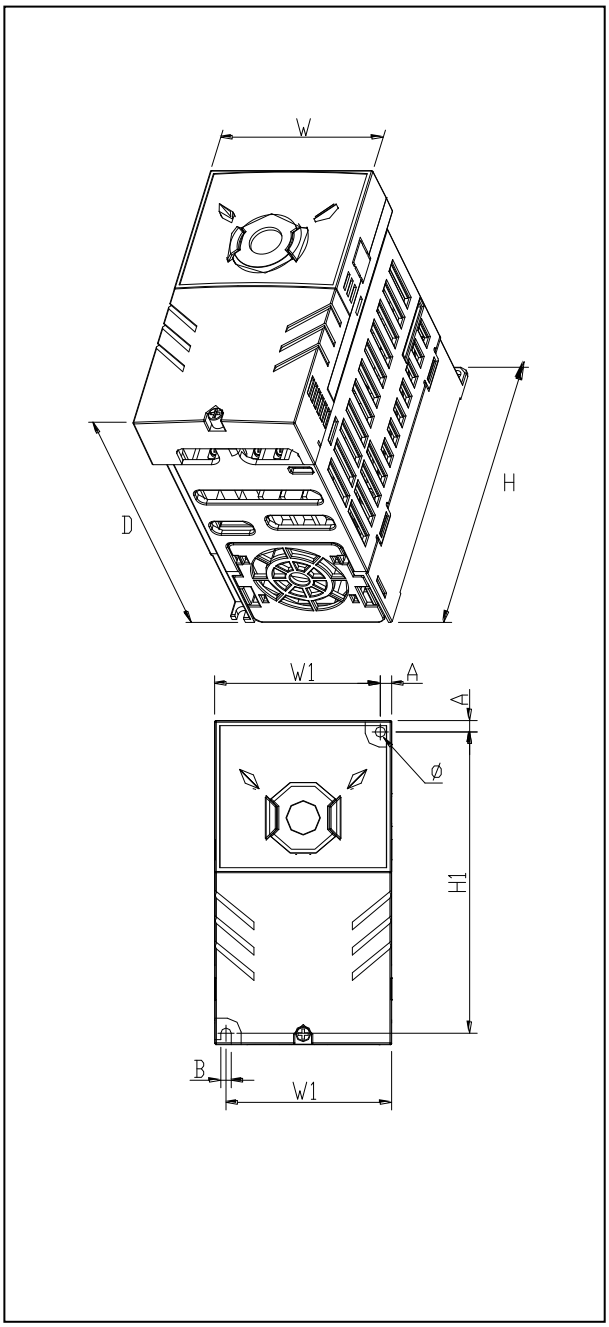

SINUS M 0003 2S/T - SINUS M 0003 4T

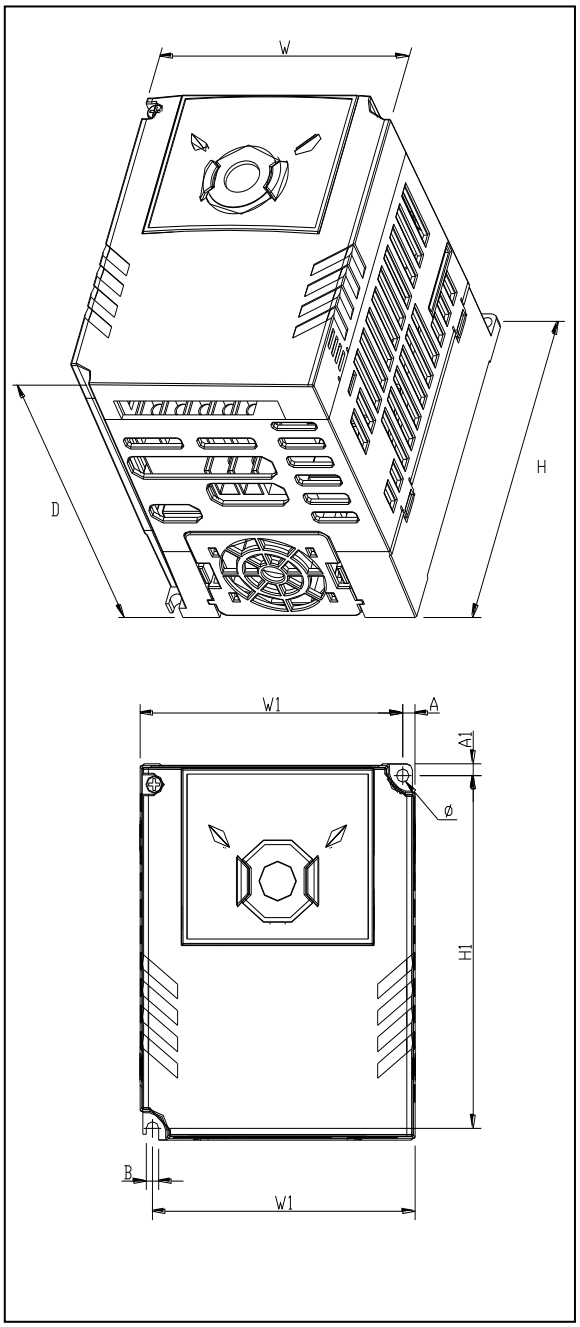

SINUS M 0005 2S/T - SINUS M 0007 2S/T
SINUS M 0005 4T - SINUS M 0007 4T

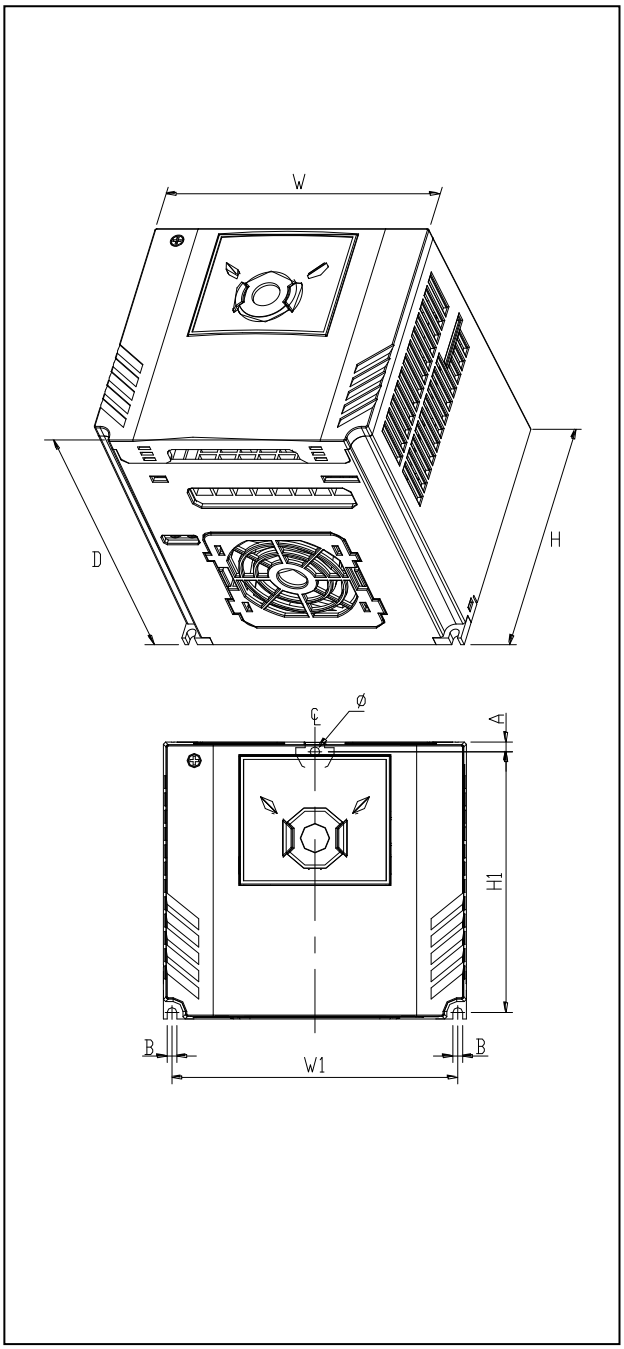

SINUS M 0011 2S/T - SINUS M 0014 2S/T
SINUS M 0011 4T - SINUS M 0014 4T

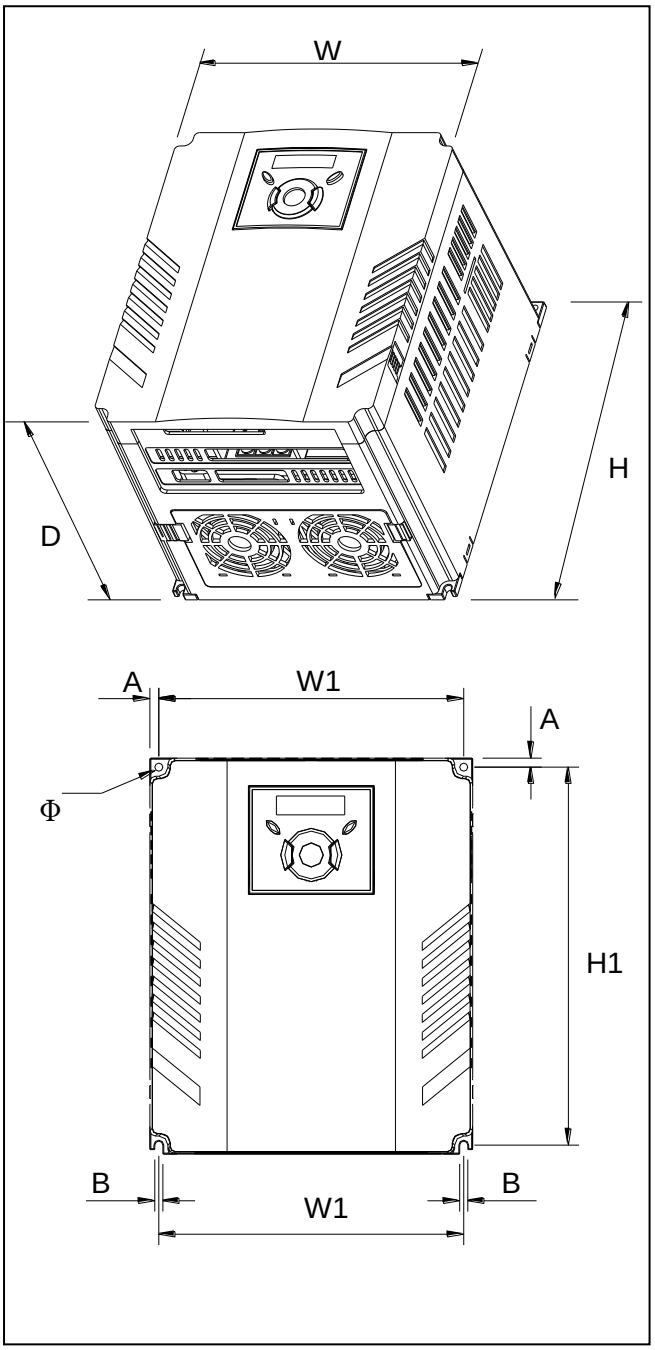

SINUS M 00017 2S/T - SINUS M 0020 2S/T
SINUS M 0017 4T - SINUS M 0020 4T

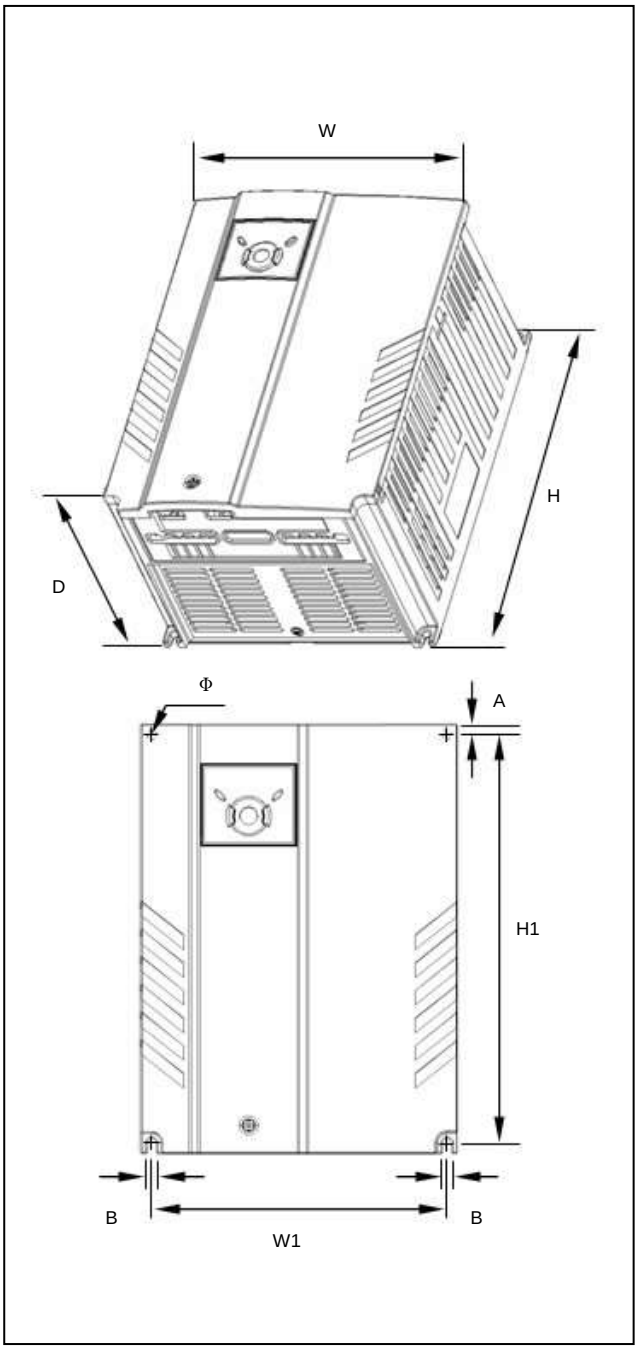

SINUS M 0025 2S/T - SINUS M 0030 2S/T
SINUS M 0025 4T - SINUS M 0030 4T

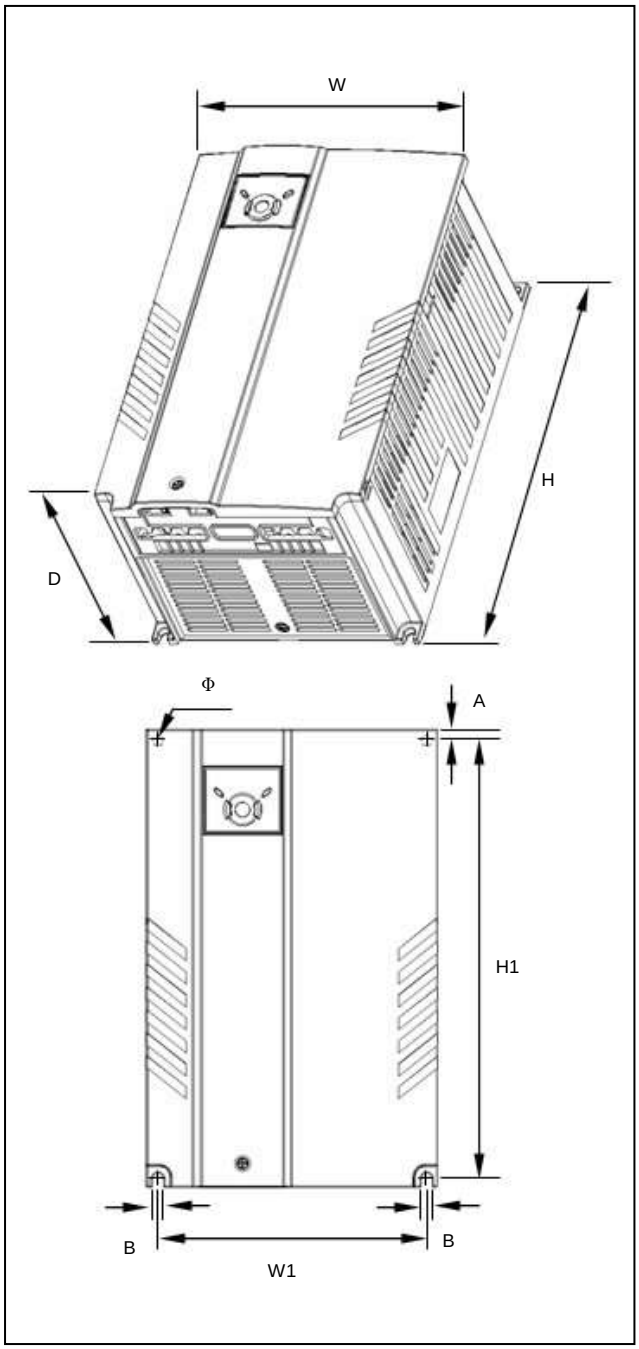

Inverter	[kW]*	W [mm]	W1 [mm]	H [mm]	H1 [mm]	D [mm]	Φ	A [mm]	B [mm]	[kg]
SINUS M 0001 2S/T	0.4	70	65.5	128	119	130	4.0	4.5	4.0	0.76
SINUS M 0002 2S/T	0.75-1.1	70	65.5	128	119	130	4.0	4.5	4.0	0.77
SINUS M 0003 2S/T	1.5-1.8	100	95.5	128	120	130	4.5	4.5	4.5	1.12
SINUS M 0005 2S/T	2.2-3	140	132	128	120.5	155	4.5	4.5	4.5	1.84
SINUS M 0007 2S/T	4-4.5	140	132	128	120.5	155	4.5	4.5	4.5	1.89
SINUS M 0011 2S/T	5.5	180	170	220	210	170	4.5	5.0	4.5	3.66
SINUS M 0014 2S/T	7.5-9.2	180	170	220	210	170	4.5	5.0	4.5	3.66
SINUS M 0017 2S/T	11	235	219	320	304	189.5	7.0	8.0	7.0	9.00
SINUS M 0020 2S/T	15	235	219	320	304	189.5	7.0	8.0	7.0	9.00
SINUS M 0025 2S/T	18.5	260	240	410	392	208.5	10.0	10.0	10.0	13.3
SINUS M 0030 2S/T	22	260	240	410	392	208.5	10.0	10.0	10.0	13.3
SINUS M 0001 4T	0.4	70	65.5	128	119	130	4.0	4.5	4.0	0.76
SINUS M 0002 4T	0.75-0.9	70	65.5	128	119	130	4.0	4.5	4.0	0.77
SINUS M 0003 4T	1.5	100	95.5	128	120	130	4.5	4.5	4.5	1.12
SINUS M 0005 4T	2.2	140	132	128	120.5	155	4.5	4.5	4.5	1.84
SINUS M 0007 4T	4.5	140	132	128	120.5	155	4.5	4.5	4.5	1.89
SINUS M 0011 4T	5.5	180	170	220	210	170	4.5	5.0	4.5	3.66
SINUS M 0014 4T	7.5	180	170	220	210	170	4.5	5.0	4.5	3.66
SINUS M 0017 4T	11	235	219	320	304	189.5	7.0	8.0	7.0	9.00
SINUS M 0020 4T	15	235	219	320	304	189.5	7.0	8.0	7.0	9.00
SINUS M 0025 4T	18.5	260	240	410	392	208.5	10.0	10.0	10.0	13.3
SINUS M 0030 4T	22	260	240	410	392	208.5	10.0	10.0	10.0	13.3

* The motor power is based on 220Vac for models “2S/T” and on 380Vac for models “4T”.

CHAPTER 3 - WIRING

3.1 Terminal wiring (Control I/Os)

Note: Wiring relates to the NPN configuration (see PNP/NPN selection and connector for communication option).

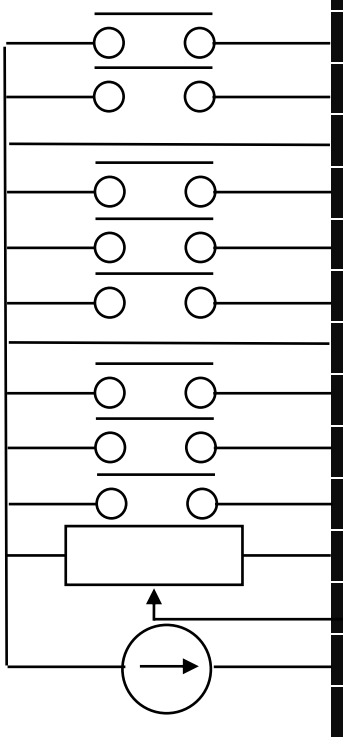

T/M	Description	
MO	Multi-function open collector output	
MG	MO Common	
24	24V output	
P1	MF input terminal (factory setting)	FX: Forward run
P2		RX: Reverse run
CM	Input signal common	
P3	MF input terminal (factory setting)	BX: Emergency stop
P4		RST: Trip reset
P5		JOG: Jog operation
CM	Input signal common	
P6	MF input terminal (factory setting)	Multi-step freq.-Low
P7		Multi-step freq.-Middle
P8		Multi-step freq.-High
VR	10V power supply for potentiometer	
V1	Freq. Setting Voltage signal input: –10~10V	
I	Freq. Setting Current signal input: 0~20mA	
AM	Multi-function analog output signal: 0~10V	

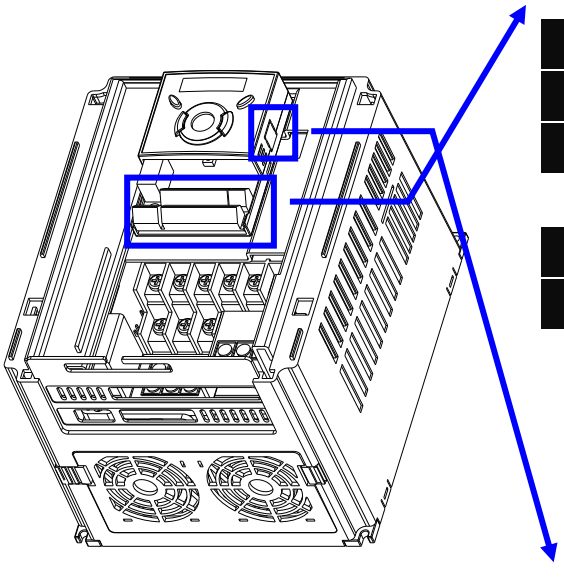

3A	Multi-function relay output terminal	A contact output NO
3B		B contact output NC
3C		A/B contact common
S+	RS485 communication terminal	
S-		

※ For connection to Remote Option or parameter copy.

Power Terminal Wiring

* Power terminal wiring (0.4 ~ 7.5kW)

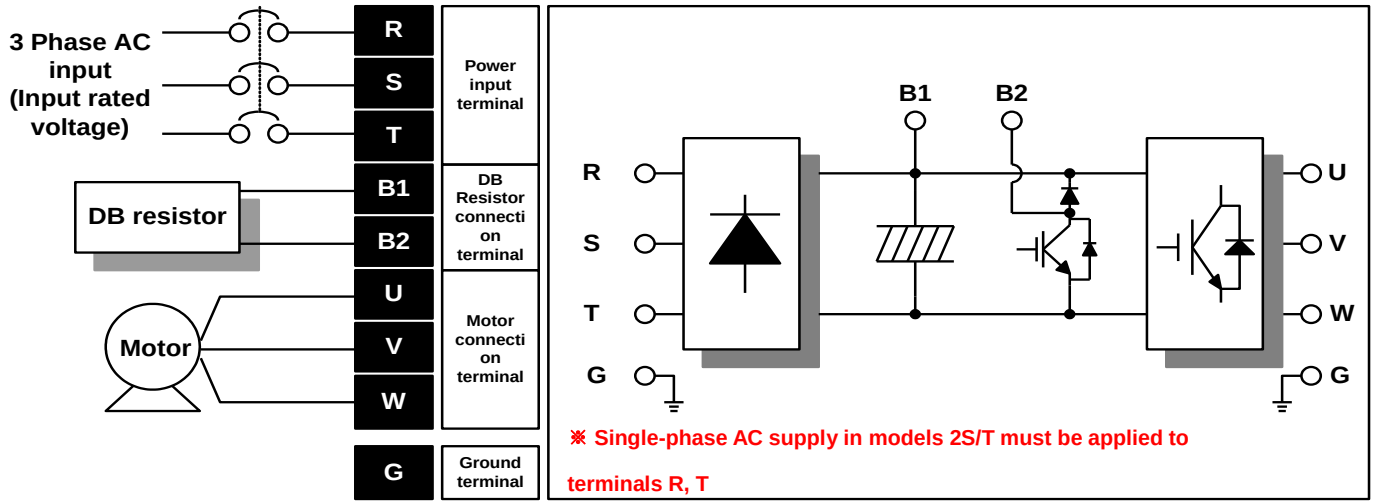

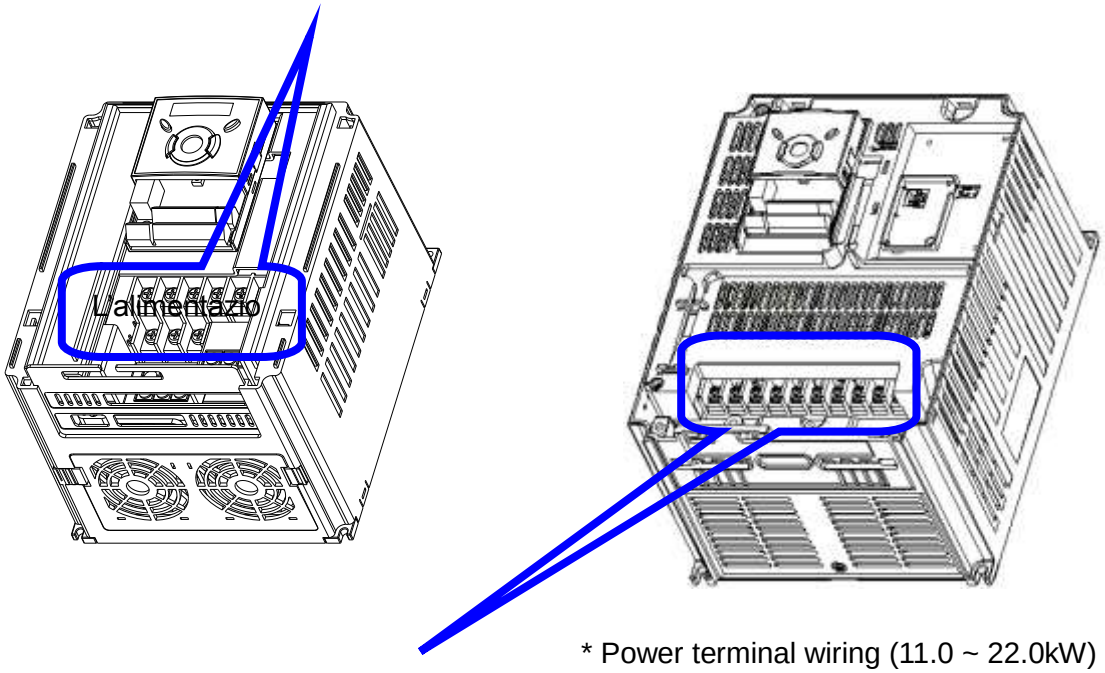

* Power terminal wiring (11.0 ~ 22.0kW)

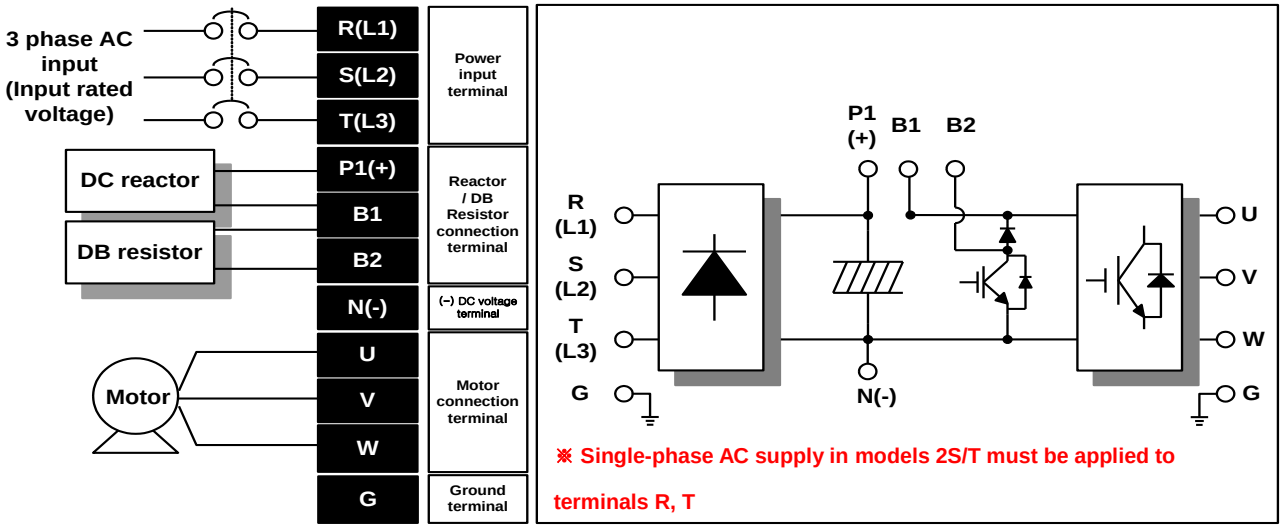

3.2 Power terminal block

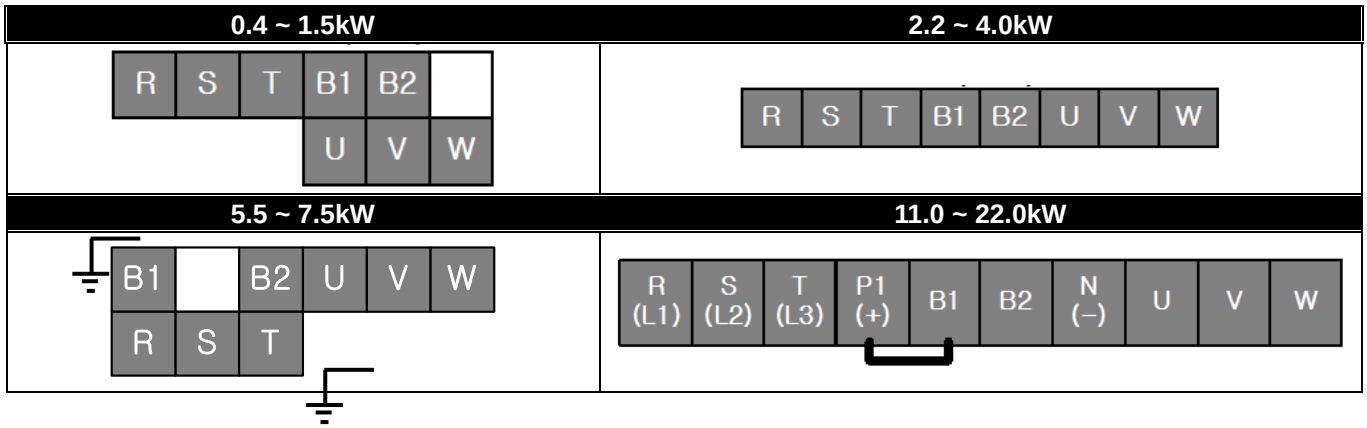

	R,S,T Wire Size		U, V, W Wire Size		Ground Wire		Screw Size	Terminal Torque
	mm^2	AWG	mm^2	AWG	mm^2	AWG	Terminal Screw Size	Screw Torque (kgf·cm/lb·in)
SINUS M 0001 2S/T	2.5	14	2.5	14	4	12	M3.5	10/8.7
SINUS M 0002 2S/T	2.5	14	2.5	14	4	12	M3.5	10/8.7
SINUS M 0003 2S/T	2.5	14	2.5	14	4	12	M3.5	10/8.7
SINUS M 0005 2S/T	2.5	14	2.5	14	4	12	M4	15/13
SINUS M 0007 2S/T	4	12	4	12	4	12	M4	15/13
SINUS M 0011 2S/T	6	10	6	10	6	10	M5	32/28
SINUS M 0014 2S/T	10	8	10	8	6	10	M5	32/28
SINUS M 0017 2S/T	16	6	16	6	16	6	M6	30.7/26.6
SINUS M 0020 2S/T	20	4	20	4	16	6	M6	30.7/26.6
SINUS M 0025 2S/T	35	2	35	2	20	4	M8	30.6/26.5
SINUS M 0030 2S/T	35	2	35	2	20	4	M8	30.6/26.5
SINUS M 0001 4T	2.5	14	2.5	14	2.5	14	M3.5	10/8.7
SINUS M 0002 4T	2.5	14	2.5	14	2.5	14	M3.5	10/8.7
SINUS M 0003 4T	2.5	14	2.5	14	2.5	14	M4	15/13
SINUS M 0005 4T	2.5	14	2.5	14	2.5	14	M4	15/13
SINUS M 0007 4T	2.5	14	2.5	14	2.5	14	M4	15/13
SINUS M 0011 4T	4	12	2.5	14	4	12	M5	32/28
SINUS M 0014 4T	4	12	4	12	4	12	M5	32/28
SINUS M 0017 4T	6	10	6	10	10	8	M5	30.7/26.6
SINUS M 0020 4T	16	6	10	8	10	8	M5	30.7/26.6
SINUS M 0025 4T	16	6	10	8	16	6	M6	30.6/26.5
SINUS M 0030 4T	20	4	16	6	16	6	M6	30.6/26.5

* Strip the sheaths of the wire insulation for 7mm when a ring terminal is not used for power connection.

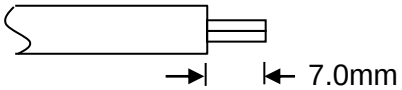

*For Sinus M 0025 and Sinus M 0030, UL-approved Ring or Fork Terminals must be used.

⚠ CAUTION

- Apply the rated torque to terminal screws. Loosen screws can cause short circuit and malfunction. Tightening the screws too much can damage the terminals and cause short circuit and malfunction.
- Use copper wires only with 600V, 75°C ratings for wiring.
- Make sure that the input power is off before wiring.
- When power supply is switched off, wait at least 10 minutes after the LED keypad display is off before you start working on it.
- Applying input power supply to output terminals U, V and W causes internal inverter damage.
- Use ring terminals with insulated caps when wiring the input power and motor wiring.
- Do not leave wire fragments inside the inverter. Wire fragments can cause faults, breakdowns and malfunctions.
- When more than one motor is connected to one inverter, the total wire length should be less than 200m. Do not use a 3-wire cable for long distances. Due to increased leakage capacitance between wires, the overcurrent protection may trip, or the equipment connected to the output side may malfunction. In case of long wire length, it should be required to lower carrier frequency or use du/dt filters or sinusoidal filters.

Length between Inverter and Motor	Up to 50m	Up to 100m	More than 100m
Allowable Carrier Frequency	Less than 15kHz	Less than 5kHz	Less than 2.5kHz

(For models of less than 3.7kW, the wire length should be less than 100m.)

- Never short B1 and B2 terminals. Shorting terminals may cause internal inverter damage.
- Do not install any power factor capacitor, surge suppressor or RFI filters in the output side of the inverter. Doing so may damage these components.
-

WARNING

The inverter power supply must be connected to R, S, and T Terminals.

Connecting it to U, V, W terminals causes internal damages to the inverter. Arranging the phase sequence is not necessary.

Motor should be connected to U, V, and W Terminals.

If the forward command (FX) is on, the motor should rotate counterclockwise when viewed from the load side of the motor. If the motor rotates in the reverse direction, switch U and V terminals.

⚠ WARNING

- Use the Type 3 grounding method (Ground impedance: Below 100Ω) for 2S/T class inverters.
- Use the Special Type 3 grounding method (Ground impedance: Below 10Ω) for 4T class inverters.
- Use the dedicated ground terminal to ground the inverter. Do not use the screw in the case or chassis, etc for grounding.

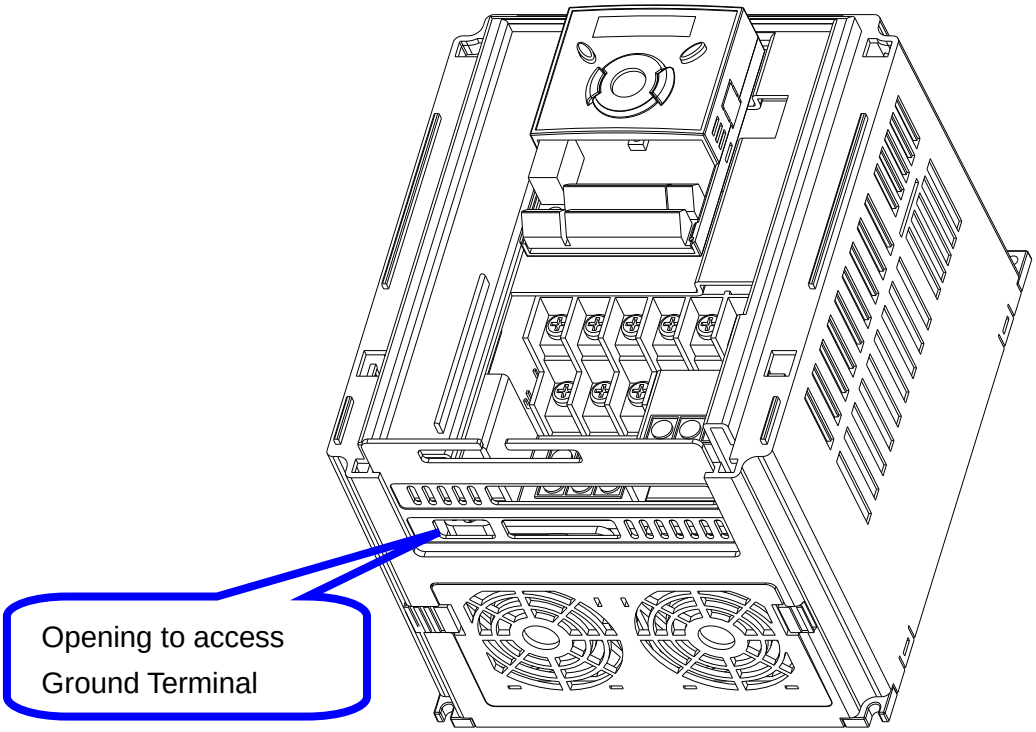

☞ Note : Grounding procedure

1) Remove the front cover.
2) Connect the Grounding wire to the ground terminal through the opening for ground terminal as shown above. Enter the screw driver from vertical to the terminal and secure the screw tightly.

☞ Note : Grounding work guidance

Inverter capacity	2S/T Class (1/3 phase 200-230Vac)			4T Class (3 phase 380-480Vac)		
	Wire size	Terminal screw	Grounding method	Wire size	Terminal screw	Grounding method
0.4~4.0 kW	4 mm^2	M3	Type 3	2.5 mm^2	M3	Special Type 3
5.5~7.5 kW	6 mm^2	M4		4 mm^2	M4	
11 ~ 15 kW	16 mm^2	M5		6 mm^2	M5	
18.5~22 kW	25 mm^2	M6		16 mm^2	M5	

3.3 Control terminal block

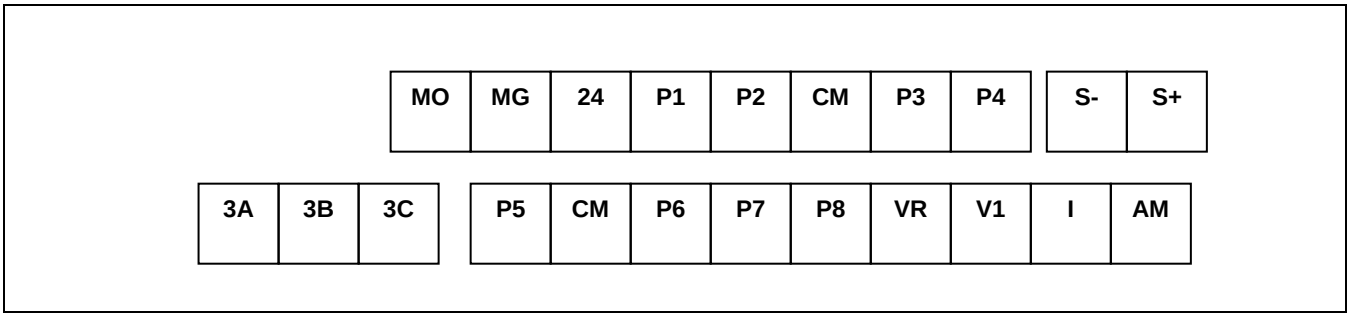

T/M	Terminal Description	Wire size[mm²]		Screw size	Torque [Nm]	Specification
		Single wire	Stranded			
P1~P8	Multi-function input T/M 1-8	1.0	1.5	M2.6	0.4	
CM	Common Terminal	1.0	1.5	M2.6	0.4	
VR	Power supply for external potentiometer	1.0	1.5	M2.6	0.4	Output voltage: 12V Max output current: 10mA Potentiometer:1 ~ 5kΩ
V1	Input terminal for Voltage operation	1.0	1.5	M2.6	0.4	Max input voltage: –12V ~ +12V input
I	Input terminal for Current operation	1.0	1.5	M2.6	0.4	0 ~ 20mA input Internal resistor: 250Ω
AM	Multi-function analog output terminal	1.0	1.5	M2.6	0.4	Max output voltage: 11[V] Max output current: 100mA
MO	Multi-function terminal for open collector	1.0	1.5	M2.6	0.4	Below 26V DC,100mA
MG	MO Common	1.0	1.5	M2.6	0.4	
24	24V External Power Supply	1.0	1.5	M2.6	0.4	Max output current: 100mA
3A	Multi-function relay output A contact NO	1.0	1.5	M2.6	0.4	Below 250V AC, 1A Below 30V DC, 1A
3B	Multi-function relay output B contact NC	1.0	1.5	M2.6	0.4	
3C	Common for Multi-function relays	1.0	1.5	M2.6	0.4	

Note 1) Tie the control wires more than 15cm away from the control terminals. Otherwise, it interferes with front cover reinstallation.

Note 2) Use Copper wires rated 600V, 75°C and higher.

Note 3) Use the recommended tightening torque when securing terminal screws.

Note 4) When you use external power supply (24V) for multi-function input terminal (P1~P8), terminals will be active above 12V level. Take caution not to drop the voltage below 12V.

3.4 PNP/NPN selection and connector for communication option

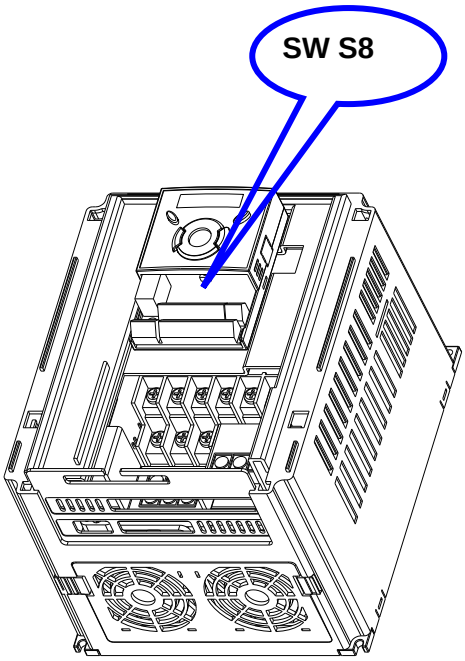

1. When using DC 24V inside inverter [NPN]

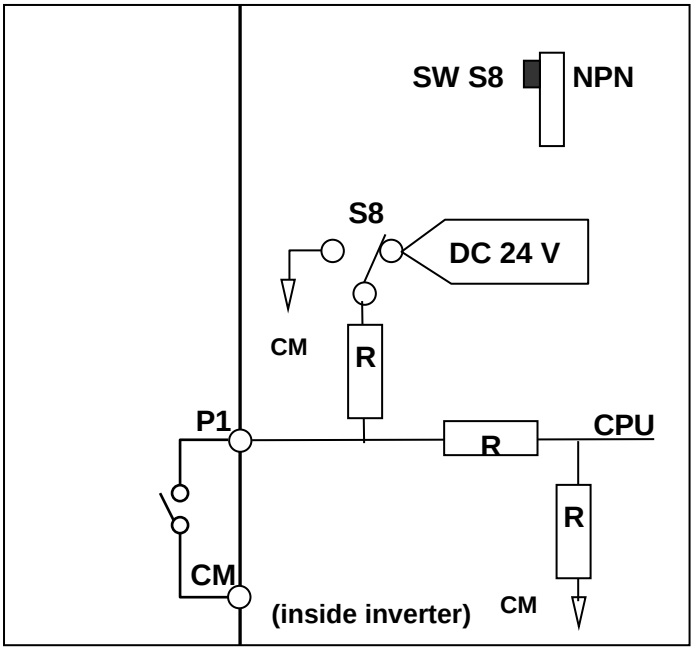

2. When using external DC 24V [PNP]

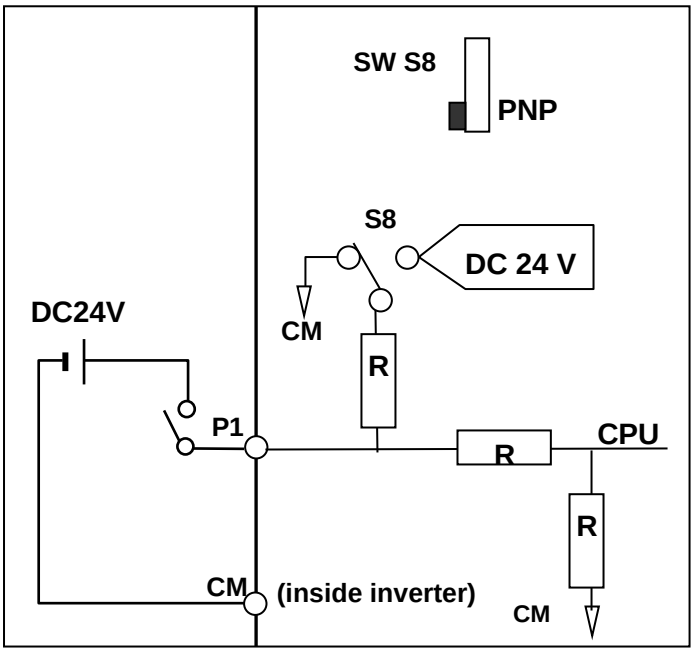

3.5 Optional External Relay

An optional external relay with a +24Vdc coil may be connected to the Open Collector output as shown below:

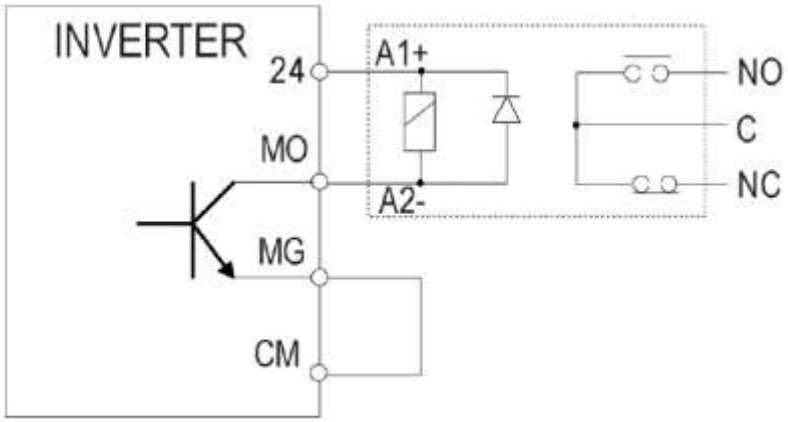

⚠ **Caution:** Respect the features of terminals MO and MG.

Notes:

CHAPTER 4 - BASIC CONFIGURATION

4.1 Connection of peripheral devices to the inverter

The following devices are required to operate the inverter. Proper peripheral devices must be selected and correct connections made to ensure proper operation. An incorrectly applied or installed inverter may cause a system malfunction or reduction in product life as well as component damage. Must be red and understood this manual thoroughly before proceeding.

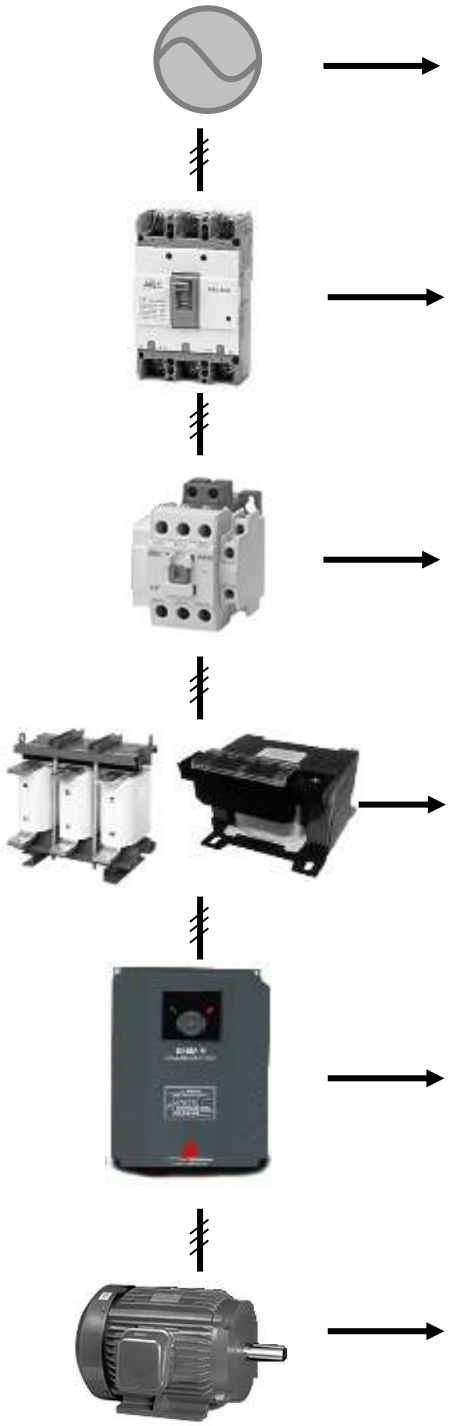

AC Source Supply	Use the power supply within the allowed range of inverter input power rating
MCCB or Earth leakage circuit breaker (ELB)	Select circuit breakers with care. A high current peak may flow in the inverter at power on.
Magnetic Contactor	Install it if necessary. When installed, do not use it for the purpose of starting or stopping. Otherwise, it could lead to reduction in product life.
AC and DC Reactors [*]	The reactors must be used when the power factor has to be improved or the inverter is installed near a large power supply system (1000kVA or more and wiring distance within 10m).
Installation and wiring	To operate the inverter with high performance for a long time, install the inverter in a proper place in the correct direction and with proper clearances. Incorrect terminals connection could damage the equipment .
To the motor	Do not connect any power factor capacitor, surge suppressor or radio noise filter to the output side of the inverter.

[*] Terminal block for DC reactor is available in more than 11kW capacity.

4.2 Recommended MCCBs and MCs

Model	MCCB	AC1 MC
	Current [A]	Current [A]
Sinus M 0001 2S/T	6	25
Sinus M 0002 2S/T	10	25
Sinus M 0003 2S/T	16	25
Sinus M 0005 2S/T	20	25
Sinus M 0007 2S/T	32	45
Sinus M 0011 2S/T	50	60
Sinus M 0014 2S/T	63	100
Sinus M 0017 2S/T	80	100
Sinus M 0020 2S/T	80	100
Sinus M 0025 2S/T	100	125
Sinus M 0030 2S/T	125	160

Model	MCCB	AC1 MC
	Current [A]	Current [A]
Sinus M 0001 4T	4	25
Sinus M 0002 4T	6	25
Sinus M 0003 4T	8	25
Sinus M 0005 4T	10	25
Sinus M 0007 4T	16	25
Sinus M 0011 4T	25	30
Sinus M 0014 4T	32	45
Sinus M 0017 4T	50	60
Sinus M 0020 4T	63	100
Sinus M 0025 4T	80	100
Sinus M 0030 4T	80	100

4.3 Recommended Fuses and Reactors

Model	AC Input Fuse (External Fuse)		AC Input Reactor	DC Reactor
	Current [A]	Voltage [V]		
Sinus M 0001 2S/T	10	500	IM0126000	–
Sinus M 0002 2S/T	10	500	IM0126002	–
Sinus M 0003 2S/T	15	500	IM0126004	–
Sinus M 0005 2S/T	25	500	IM0126044	–
Sinus M 0007 2S/T	40	500	IM0126044	–
Sinus M 0011 2S/T	40	500	IM0126084	–
Sinus M 0014 2S/T	50	500	IM0126124	–
Sinus M 0017 2S/T	70	500	IM0126144	IM0140254
Sinus M 0020 2S/T	100	500	IM0126164	IM0140254
Sinus M 0025 2S/T	100	500	IM0126164	IM0140284
Sinus M 0030 2S/T	125	500	IM0126164	IM0140284
Sinus M 0001 4T	5	500	IM0126000	–
Sinus M 0002 4T	10	500	IM0126000	–
Sinus M 0003 4T	10	500	IM0126000	–
Sinus M 0005 4T	10	500	IM0126002	–
Sinus M 0007 4T	20	500	IM0126004	–
Sinus M 0011 4T	20	500	IM0126044	–
Sinus M 0014 4T	30	500	IM0126044	–
Sinus M 0017 4T	35	500	IM0126084	IM0140154
Sinus M 0020 4T	45	500	IM0126124	IM0140204
Sinus M 0025 4T	60	500	IM0126124	IM0140204
Sinus M 0030 4T	70	500	IM0126144	IM0140254

- **Short Circuit Rating**

Suitable for use on a circuit capable of delivering not more than 65kA symmetrical Amperes.
240V drives or 480V drives Volts Maximum.

- **Short Circuit FUSE/BREAKER Marking**

Use Class H or K5 UL Listed Input Fuses and UL Listed breakers only. See the table above for the voltage and current rating of the fuses and the breakers.

- **AC Reactors**

INDUCTANCE MODEL	INDUCTANCE RATINGS		DIMENSIONS							HOLE	WGT	LEAKAGE
	mH	A	TYPE	L	H	P	M	E	G	mm	kg	W
IM0126004	2.00	11	A	120	125	75	25	67	55	5	2.9	29
IM0126044	1.27	17	A	120	125	75	25	67	55	5	3	48
IM0126084	0.70	32	B	150	130	115	50	125	75	7x14	5.5	70
IM0126124	0.51	43	B	150	130	115	50	125	75	7x14	6	96
IM0126144	0.30	68	B	180	160	150	60	150	82	7x14	9	150
IM0126164	0.24	92	B	180	160	150	60	150	82	7x14	9.5	183

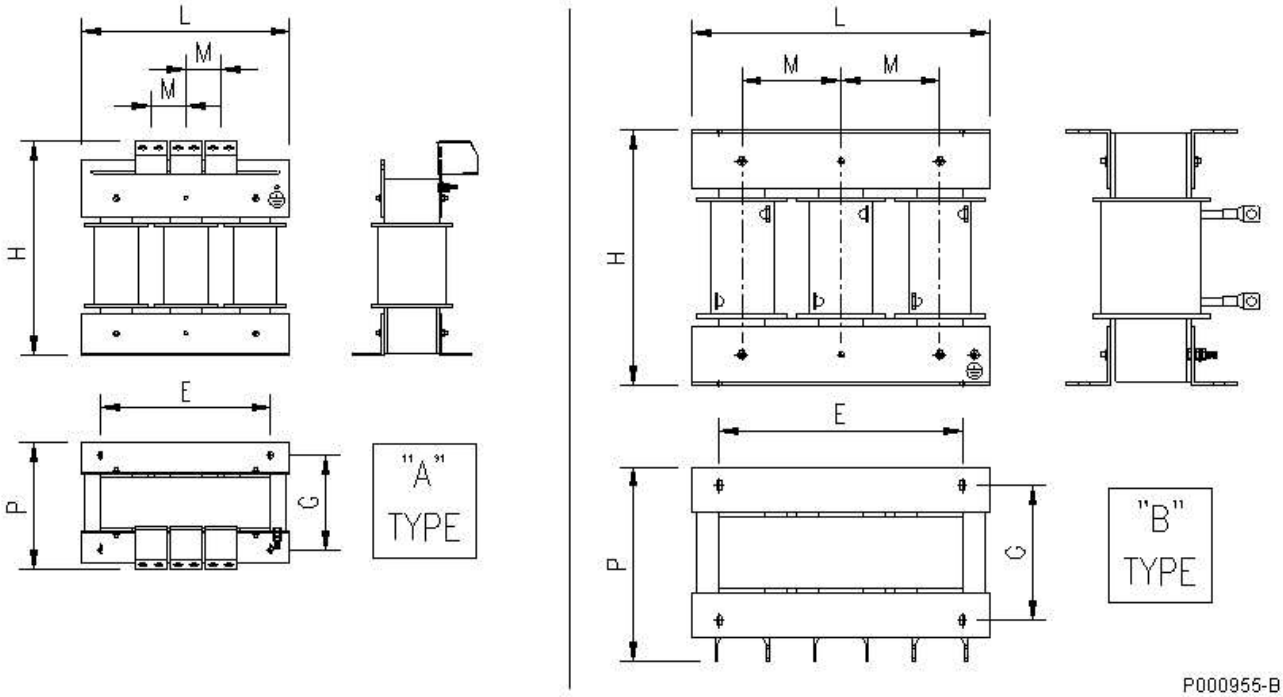

- **DC Reactors**

INDUCTANCE MODEL	INDUCTANCE RATINGS		DIMENSIONS					HOLE	WGT	LEAKAGE
	mH	A	L	H	P	E	G	mm	kg	W
IM0140154	2.8	32.5	160	140	120	100	100	7x10	8	50
IM0140204	2	47	160	210	160	97	120	7x14	13	80
IM0140254	1.2	69	160	210	160	97	120	7x14	13.5	90
IM0140274	0.96	94	contact Enertronica Santerno S.p.A.							

CHAPTER 5 - PROGRAMMING KEYPAD

5.1 Keypad features

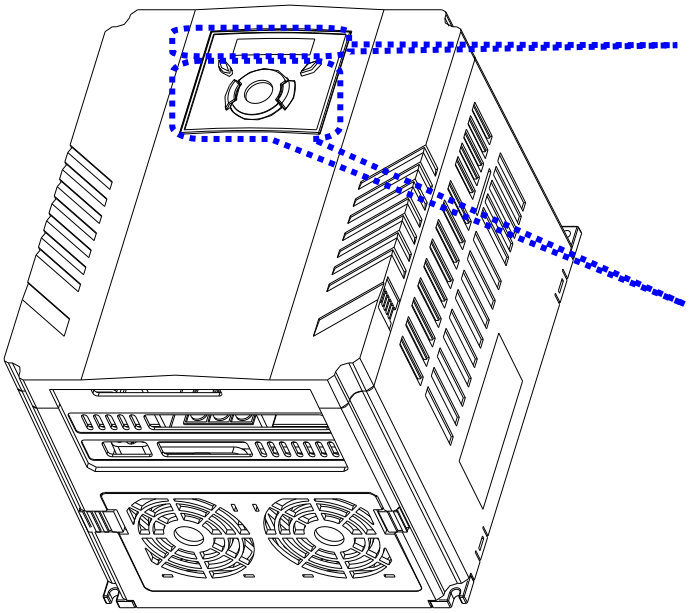

Display

- SET/RUN LED
- FWD/REV LED
- 7 Segment LED

Key

- RUN
- STOP/RESET
- Up/Down
- Left/Right
- Enter [ENT]

Display		
FWD	Lit during forward run	Blinks when a fault occurs
REV	Lit during reverse run	
RUN	Lit during Operation	
SET	Lit during parameter setting	
7 segment	Displays operation status and parameter information	

Keys		
RUN		Run command
STOP/RESET		STOP: Stop command during operation, RESET: Reset command when fault occurs.
▲	UP	Used to scroll through codes or increase parameter value
▼	Down	Used to scroll through codes or decrease parameter value
◀	Left	Used to jump to other parameter groups or move a cursor to the left to change the parameter value
▶	Right	Used to jump to other parameter groups or move cursor to the right to change the parameter value
●	ENT	Used to set the parameter value or save the changed parameter value

5.2 Alpha-numeric view on the LED keypad

0	0	A	A	K	K	U	U
1	1	b	B	L	L	v	V
2	2	C	C	M	M	W	W
3	3	d	D	n	N	X	X
4	4	E	E	o	O	Y	Y
5	5	F	F	P	P	Z	Z
6	6	G	G	q	Q		
7	7	H	H	r	R		
8	8	I	I	S	S		
9	9	J	J	t	T		

5.3 Moving to other groups

- There are 4 different parameter groups in Sinus M series as shown below.

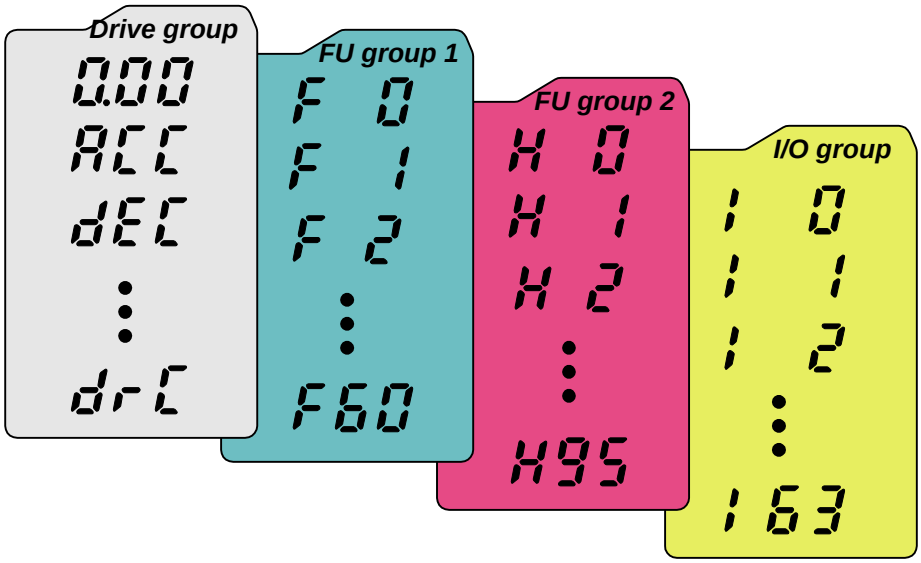

Drive group	Basic parameters necessary for the inverter to run. Parameters such as Target frequency, Accel/Decel time settable.
Function group 1	Basic function parameters to adjust output frequency and voltage.
Function group 2	Advanced function parameters to set parameters for such as PID Operation and second motor operation.
I/O (Input/Output) group	Parameters necessary to make up a sequence using Multi-function input/output terminal.

- **<u>Moving to other parameter groups</u>** is only available in the first code of each group as the figure shown below.

Moving to other groups using the Right (▶) key	Moving to other groups using the Left (◀) key
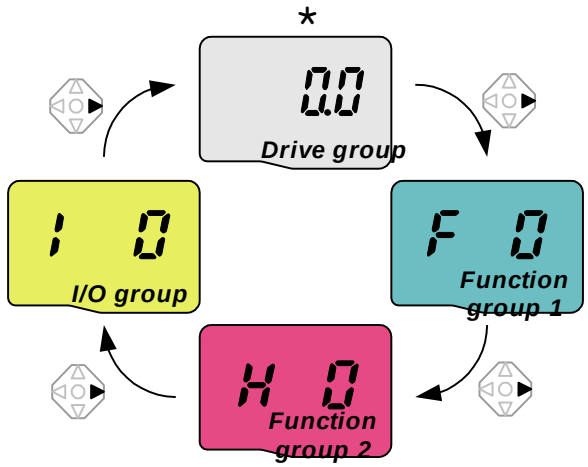	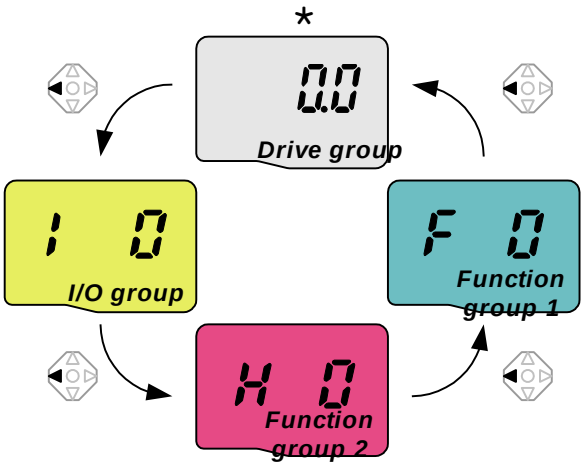

* Target frequency can be set at **0.0** (the 1st code of drive group). Even though the preset value is 0.0, it is user-settable. The changed frequency will be displayed after it is changed.

- How to move to other groups at the 1st code of each group

1	0.00	-. **<u>The 1st code in Drive group "0.00"</u>** will be displayed when AC input power is applied. -. Press the right arrow (▶) key once to go to Function group 1.
2	F 0	-. **<u>The 1st code in Function group 1 "F0"</u>** will be displayed. -. Press the right arrow (▶) key once to go to Function group 2.
3	H 0	-. **<u>The 1st code in Function group 2 "H0"</u>** will be displayed. -. Press the right arrow (▶) key once to go to I/O group.
4	I 0	**<u>-. The 1st code in I/O group "I0" will be displayed.</u>** -. Press the right arrow (▶) key once again to return to Drive group.
5	0.00	-. Return to **<u>the 1st code in Drive group "0.00"</u>**.

♣ If the left arrow key (◀) is used, the above will be executed in the reverse order.

- How to move to other groups from any codes other than the 1st code

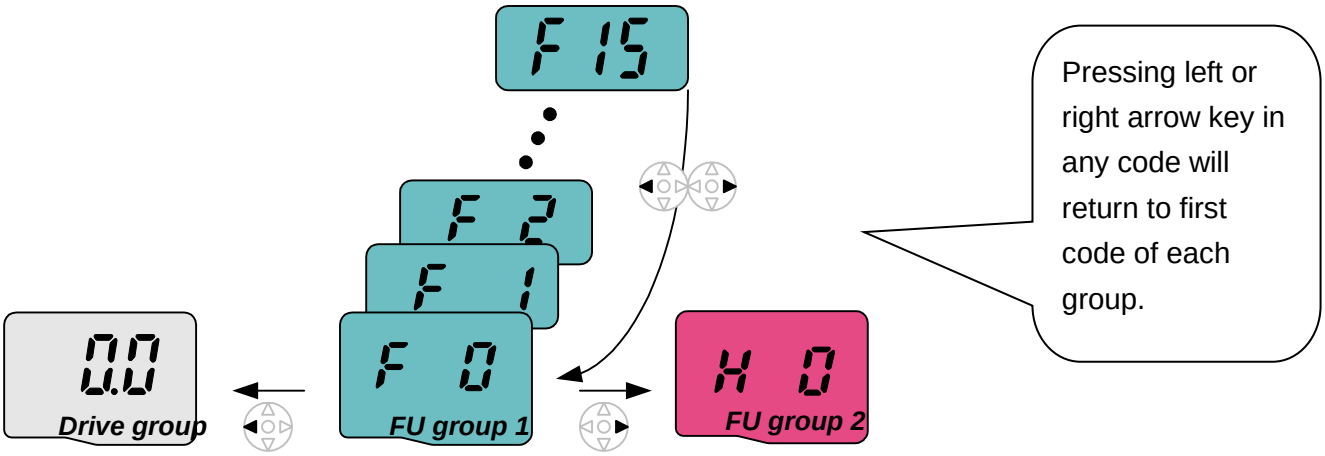

To move from the F15 to function group 2

1	F 15	-. In F15, press the Left (◀) or Right arrow (▶) key. Pressing the key goes to the first code of the group.
2	F 0	-. The 1st code in function group 1 "F0" is displayed. -. Press the right arrow (▶) key.
3	H 0	-. The 1st code in function group 2 "H0" will be displayed.

5.4 How to change the codes in a group

- Code change in Drive group

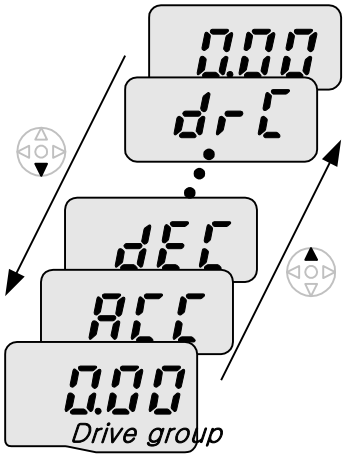

1	0.00	-. In the 1st code in Drive group “0.00”, press the Up (▲) key once.
2	ACC	-. The 2nd code in Drive group “ACC” is displayed. -. Press the Up (▲) key once.
3	dEC	-. The 3rd code “dEC” in Drive group is displayed. -. Keep pressing the Up (▲) key until the last code appears.
4	drC	-. The last code in Drive group “drC” is displayed. -. Press the Up (▲) key again.
5	0.00	-. Return to the first code of Drive group.
♣ Use Down (▼) key for the opposite order.		

- Code jump

When moving from the “F0” to the “F15” directly

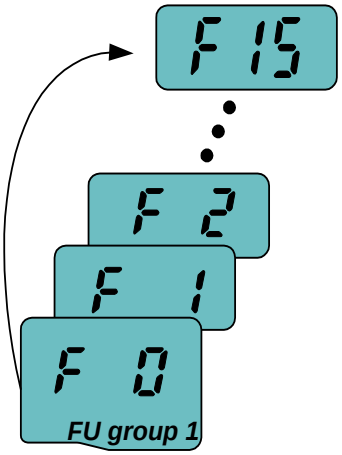

1	F 0	-. Press the Ent (●) key in “F0”.
2	1	-. 1 (the code number of F1) is displayed. Use the Up (▲) key to set to 5.
3	05	-. “**05**” is displayed by pressing the Left (◀) key once to move the cursor to the left. The numeral having a cursor is displayed brighter. In this case, **0** is active. -. Use the Up (▲) key to set to 1.
4	15	-. **15** is set. -. Press the Ent (●) key once.
5	F 15	-. Moving to F15 has been complete.

♣ Function group 2 and I/O group are settable with the same setting.

- Navigating codes in a group

When moving from F1 to F15 in Function group 1

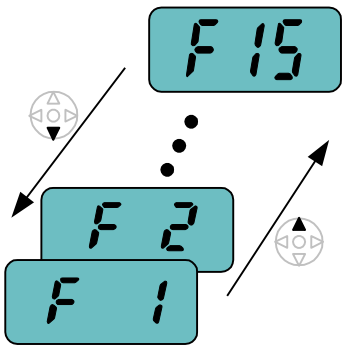

1	F 1	-. In F1, continue pressing the Up (▲) key until F15 is displayed.
2	F 15	-. Moving to F15 has been complete.
♣ The same applies to Function group 2 and I/O group.		

♣Note: Some codes will be skipped in the middle of increment (▲)/decrement (▼) for code change. That is because it is programmed that some codes are intentionally left blank for future use or the codes user does not use are invisible.

For example, when F24 [High/low frequency limit select] is set to “O (No) ”, F25 [High frequency limit] and F26 [Low frequency limit] are not displayed during code change. But When F24 is set to “1(Yes)”, F25 and F26 will appear on the display.

5.5 Parameter setting

- Changing parameter values in Drive Group

When changing ACC time from 5.0 sec to 16.0 sec

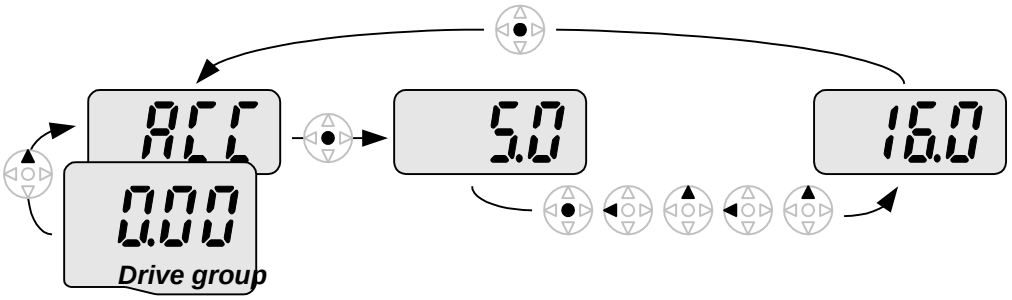

1	0.00	-. In the first code “0.00”, press the Up (▲) key once to go to the second code.
2	ACC	-. ACC [Accel time] is displayed. -. Press the Ent key (●) once.
3	5.0	-. Preset value is 5.**0**, and the cursor is in the digit **0**. -. Press the Left (◀) key once to move the cursor to the left.
4	5.0	-. The digit **5** in **5**.0 is active. Then press the Up (▲) key once.
5	6.0	-. The value is increased to **6**.0 -. Press the Left (◀) key to move the cursor to the left.
6	0.60	-. **0**.60 is displayed. The first **0** in **0**.60 is active. -. Press the Up (▲) key once.
7	16.0	-. **1**6.0 is set. -. Press the Ent (●) key once. -. **1**6.0 is blinking. -. Press the Ent (●) key once again to return to the parameter name.
8	ACC	-. **ACC** is displayed. **Accel time** is changed from 5.0 to 16.0 sec.

♣ In step 7, pressing the Left (◀) or Right (▶) key while 16.0 is blinking will disable the setting.

Note 1) Pressing the Left (◀)/ Right (▶) /Up (▲) /Down (▼) key while cursor is blinking will cancel the parameter value change. Pressing the Enter key (●) in this status will enter the value into memory.

- Frequency setting

When changing run frequency to 30.05 Hz in Drive group

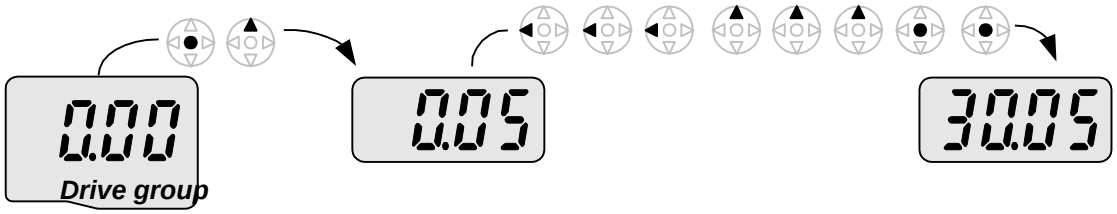

1	0.00	-. In “0.00”, press the Ent (●) key once.
2	0.00	-. The second decimal **0** becomes active. -. Press the UP (▲) key until 5 is displayed.
3	0.05	-. Press the Left (◀) key once.
4	0.05	-. The first decimal **0** becomes active. -. Press the Left (◀) key once.
5	0.05	-. Press the Left (◀) key once.
6	0.05	-. Set 3 using UP (▲) key.
7	30.05	-. Press the Ent (●) key. -. 30.05 is blinking. -. Press the Ent (●) key.
8	30.05	-. 30.05 is entered into memory.

♣ Sinus M display can be extended to 5 digits using left (◀)/right (▶) keys.

♣ Parameter setting is disabled when pressing other than Enter Key in step 7.

- Changing parameter value in Input/Output group

When changing the parameter value of F28 from 2 to 5

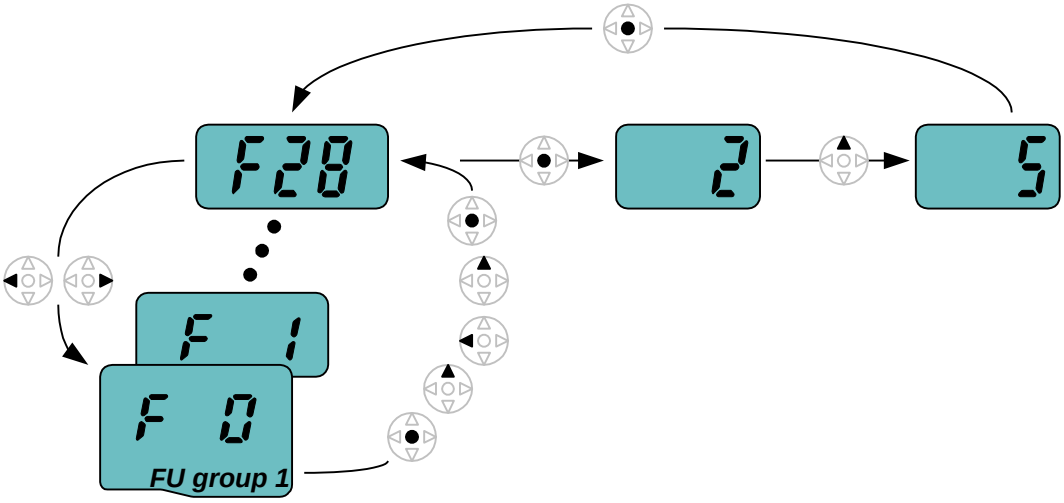

1	F 0	-. In F0, press the Ent (●) key once.
2	1	-. Check the present code number. -. Increase the value to 8 by pressing the Up (▲) key.
3	8	-. When 8 is set, press the Left (◀) key once.
4	08	-. **0** in **0**8 is active. -. Increase the value to 2 by pressing the Up (▲) key.
5	28	-. **2**8 is displayed -. Press the Ent (●) key once.
6	F 28	-. The parameter number F28 is displayed. -. Press the Ent (●) key once to check the set value.
7	2	-. The preset value 2 is displayed. -. Increase the value to 5 using UP key (▲).
8	5	-. Press the Ent (●) key twice.
9	F 28	-. Parameter change is complete. -. Press either the Left (◀) or Right (▶) key.
10	F 0	-. Moving to first code of Function group 1 is complete.

♣ The above setting is also applied to change parameter values in function group 2 and I/O group.

5.6 Monitoring of operation status

- Output current display

Monitoring output current in Drive group

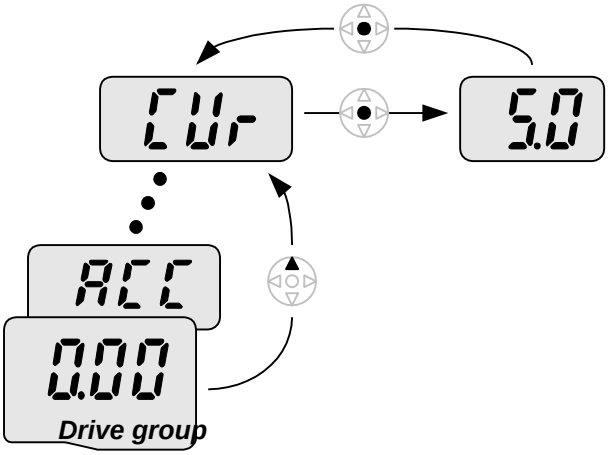

1	0.00	-. In [0.0], continue pressing the Up (▲) or Down (▼) key until [CUr] is displayed.
2	CUr	-. Monitoring output current is provided in this parameter. -. Press the Enter (●) key once to check the current.
3	5.00	-. Present output current is 5 A. -. Press the Enter (●) key once to return to the parameter name.
4	CUr	-. Return to the output current monitoring code.

♣ Other parameters in Drive group such as dCL (Inverter DC link voltage) or vOL (Inverter output voltage) can be monitored with the same method.

- Fault display

How to monitor a fault condition in the Drive group

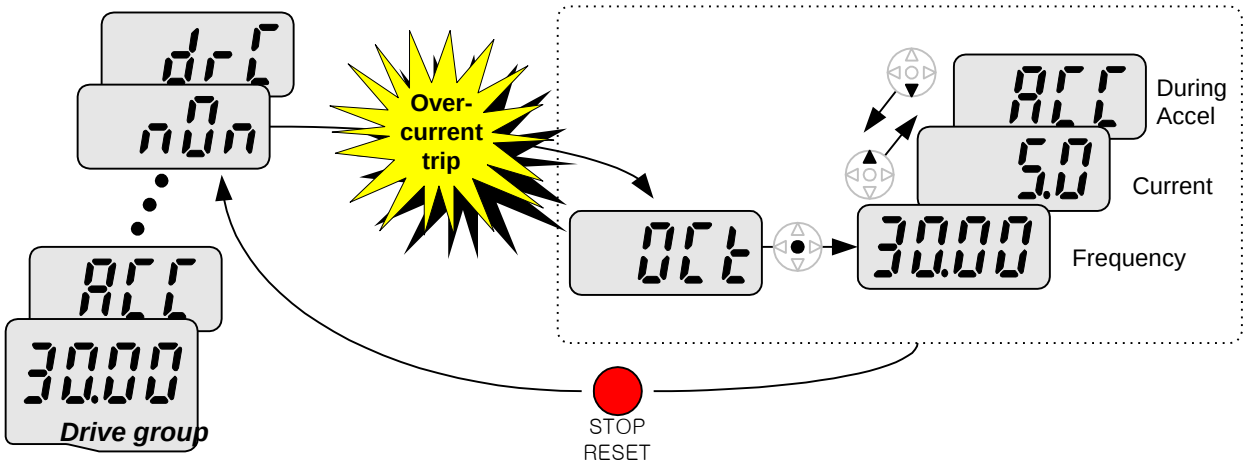

1	OCt	-. This message appears when an Overcurrent fault occurs. -. Press the Enter (●) key or UP/Down key once.
2	30.00	-. The **run frequency** at the time of fault (30.0) is displayed. -. Press the Up (▲) key once.
3	5.0	-. The **output current** at the time of fault is displayed. -. Press the Up (▲) key once.
4	ACC	-. Operating status is displayed. A fault occurred during acceleration. ● -. Press the STOP/RST key once.
5	nOn	-. A fault condition is cleared and “nOn” is displayed.

When more than one fault occurs at the same time

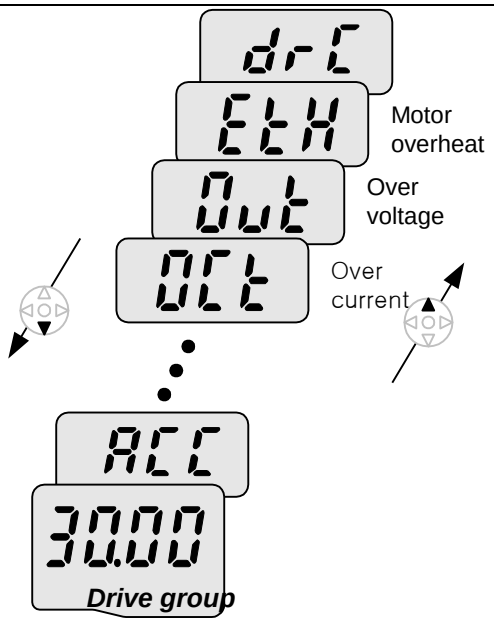

-. Maximum three faults information is displayed as shown left.

- Parameter initialize

How to initialize parameters of all four groups in H93

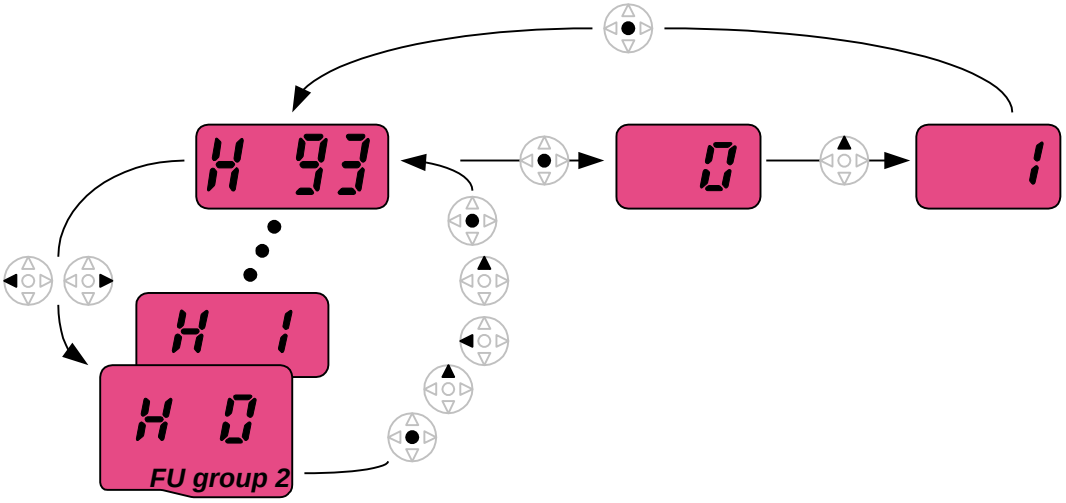

1	H 0	-. In H0, press the Enter (●) key once.
2	1	-. Code number of H0 is displayed. -. Increase the value to 3 by pressing the Up (▲) key.
3	3	-. In **3**, press the Left (◀) key once to move the cursor to the left.
4	03	-. **0**3 is displayed. **0** in **0**3 is active. -. Increase the value to 9 by pressing the Up (▲) key.
5	93	-. **9**3 is set. -. Press the Enter (●) key once.
6	H 93	-. The parameter number is displayed. -. Press the Enter (●) key once.
7	0	-. Present setting is 0. -. Press the Up (▲) key once to set to 1 to activate parameter initialize.
8	1	-. Press the Enter (●) key twice.
9	H 93	-. Parameter initialize is complete. -. Press either the Left (◀) or Right (▶) key.
10	H 0	-. Return to H0.

CHAPTER 6 - BASIC OPERATION

6.1 Frequency Setting and Basic Operation

⚠ **Caution:** The following instructions are given based on the fact that all parameters are set to factory defaults. Results could be different if parameter values are changed. In this case, initialize parameter values back to factory defaults and follow the instructions below.

● Frequency Setting via keypad & operating via terminals

1		-. Apply AC input power to the inverter.
2	0.00	-. When 0.00 appears, press the Ent (●) key once.
3	0.00	-. The second digit in 0.0**0** is lit as shown right. -. Press the Left (◀) key three times.
4	00.00	-. **0**0.00 is displayed and the first **0** is lit. -. Press the Up (▲) key.
5	10.00	-. **1**0.00 is set. Press the Ent (●) key once. -. 10.00 is blinking. Press the Ent (●) key once.
6	10.00	-. Run frequency is set to **10.00** Hz when the blinking stops. -. Turn on the switch between P1 (FX) and CM terminals.
7	10.00	-. RUN lamp begins to blink with FWD (Forward Run) lit and accelerating frequency is displayed on the LED. -. When target run frequency 10Hz is reached, **10.00** is displayed. -. Turn off the switch between P1 (FX) and CM terminals.
8	10.00	-. RUN lamp begins to blink and decelerating frequency is displayed on the LED. -. When run frequency is reached to 0Hz, Run and FWD lamp turn off and **10.00** is displayed.

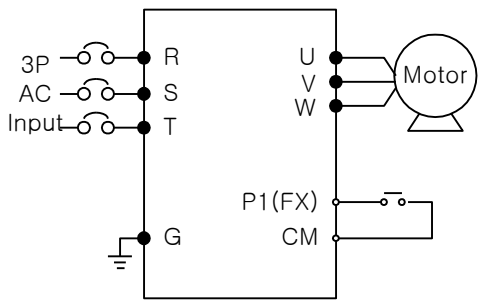

Wiring

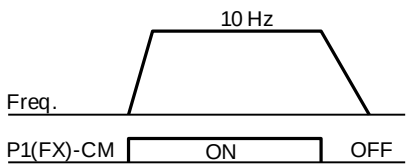

Operating pattern

● Frequency Setting via potentiometer & operating via terminals

1		-. Apply AC input power to the inverter.
2	0.00	-. When 0.00 appears Press the Up (▲) key four times.
3	Frq	-. Frq is displayed. Frequency setting mode is selectable. -. Press the Ent (●) key once.
4	0	-. Present setting method is set to 0 (frequency setting via keypad). -. Press the Up (▲) key three times.
5	3	-. After 3 (Frequency setting via potentiometer) is set, press the Ent (●) key once.
6	Frq	-. Frq is redisplayed after 3 stops blinking. -. Turn the potentiometer to set to 10.00 Hz in either Max or Min direction.
7	10.00	-. Turn on the switch between P1 (FX) and CM (See Wiring below). -. RUN lamp begins to blink with FWD lamp lit and the accelerating frequency is displayed on the LED. -. When run frequency 10Hz is reached, the value is displayed as shown left. -. Turn off the switch between P1 (FX) and CM terminals.
8	10.00	-. RUN lamp begins to blink and decelerating frequency is displayed on the LED. -. When run frequency is reached to 0Hz, Run and FWD lamp turn off and **10.00** is displayed.

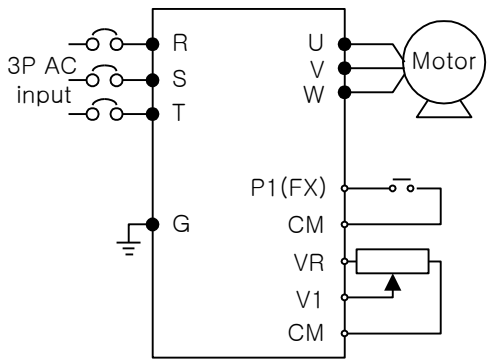

Wiring

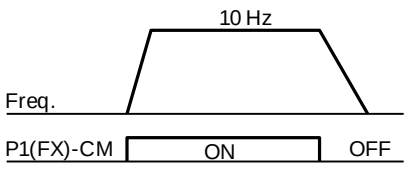

Operating pattern

- Frequency setting via potentiometer & operating via the Run key

1		-. Apply AC input power to the inverter.
2	0.00	-. When 0.00 is displayed, press the Up (▲) key three times.
3	drv	-. “drv” is displayed. Operating method is selectable. -. Press the Ent (●) key.
4	1	-. Check the present operating method (“1”: Run via control terminal). -. Down (▼) key once.
5	0	-. After setting “0”, press the Ent (●) key. When 0 is blinking, press the Ent again.
6	drv	-. “drv” is displayed after “0” is blinking. Operation method is set via the Run key on the keypad. -. Press the Up (▲) key once.
7	Frq	-. Different frequency setting method is selectable. -. Press the Ent (●) key.
8	0	-. Check the present frequency setting method (“**0**” is run via keypad). -. Press the Up (▲) key three times.
9	3	-. After checking “**3**” (frequency setting via potentiometer), press the Ent (●) key twice.
10	Frq	-. “**Frq**” is displayed. Frequency is set via the potentiometer. -. Turn the potentiometer to set to 10.0 Hz in either Max or Min direction.
11	10.00	-. Press the Run key on the keypad. -. RUN lamp begins to blink with FWD lamp lit and accelerating frequency is displayed on the LED. -. When run frequency 10Hz is reached, **10.00** is displayed as shown left. -. Press the STOP/RST key.
12	10.00	-. RUN lamp begins to blink and decelerating frequency is displayed on the LED. -. When run frequency is reached to 0Hz, Run and FWD lamp turn off and **10.00** is displayed.

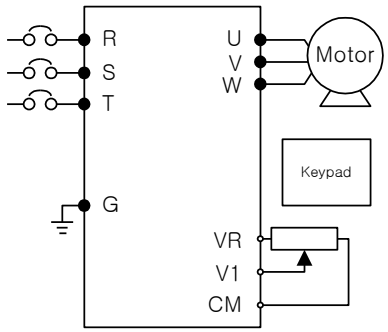

Wiring

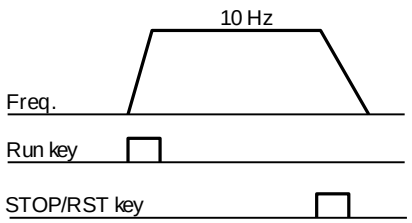

Operating pattern

Notes:

CHAPTER 7 - FUNCTION LIST

7.1 Drive group

LED display	Parameter name	Setting range	Description			Factory defaults	Adj. during run
0.00	[Frequency command]	0 ~ 400 [Hz]	This parameter sets the frequency that the inverter is commanded to output. During Stop: Frequency Command During Run: Output Frequency During Multi-step operation: Multi-step frequency 0. It cannot be set greater than F21- [Max frequency].			0.00	O
ACC	[Accel time]	0 ~ 6000 [Sec]	During Multi-Accel/Decel operation, this parameter serves as Accel/Decel time 0.			5.0	O
dEC	[Decel time]					10.0	O
drv	[Drive mode]	0 ~ 3	0	Run/Stop via Run/Stop key on the keypad		1	X
			1	Terminal operation	FX: Motor forward run RX: Motor reverse run		
			2		FX: Run/Stop enable RX: Direction		
			3	RS485 communication			
Frq	[Frequency setting method]	0 ~ 8	0	Digital	Keypad setting 1	0	X
			1		Keypad setting 2		
			2	Analog	V1 1: –10 ~ +10 [V]		
			3		V1 2: 0 ~ +10 [V]		
			4		Terminal I: 0 ~ 20 [mA]		
			5		Terminal V1 setting 1 + Terminal I		
			6		Terminal V1 setting 2+ Terminal I		
			7	RS485			
			8	Digital Volume (Up-Down)			
REF	PID Ref	-	Displays PID reference			-	-
FBK	PID Feedback	-	Displays PID Feedback			-	-
St1	[Multi-Step frequency 1]	0 ~ 400 [Hz]	Sets Multi-Step frequency 1 during Multi-step operation.			10.00	O
St2	[Multi-Step frequency 2]		Sets Multi-Step frequency 2 during Multi-step operation.			20.00	O
St3	[Multi-Step frequency 3]		Sets Multi-Step frequency 3 during Multi-step operation.			30.00	O
CUr	[Output current]		Displays the output current to the motor.			-	-

LED display	Parameter name	Setting range	Description			Factory defaults	Adj. during run
rPM	[Motor RPM]		Displays the number of Motor RPM.			-	-
dCL	[Inverter DC link voltage]		Displays DC link voltage inside the inverter.			-	-
vOL	[User display select]		This parameter displays the item selected at H73- [Monitoring item select].			vOL	-
			vOL	Output voltage			
			POr	Output power			
			tOr	Torque			
nOn	[Fault Display]		Displays the types of faults, frequency and operating status at the time of the fault			-	-
drC	[Direction of motor rotation select]	F, r	Sets the direction of motor rotation when drv - [Drive mode] is set to 0.			F	O
			F	Forward			
			r	Reverse			
drv2 [1)]	[Drive mode 2]	0 ~ 3	0	Run/Stop via Run/Stop key on the keypad		1	X
			1	Terminal operation	FX: Motor forward run RX: Motor reverse run		
			2		FX: Run/Stop enable RX: Direction		
			3		RS485 Communication		
Frq2 [1)]	[Frequency setting method 2]	0 ~ 7	0	Digital	Keypad setting 1	0	X
			1		Keypad setting 2		
			2	Analog	V1 1: –10 ~ +10 [V]		
			3		V1 2: 0 ~ +10 [V]		
			4		Terminal I: 0 ~ 20 [mA]		
			5		Terminal V1 setting 1 + Terminal I		
			6		Terminal V1 setting 2+ Terminal I		
			7	Digital	RS485 Communication		

[1)]: Displayed only when one of the Multi-function input terminals 1-8 [I17~I24] is set to “22”.

LED display	Parameter name	Setting range	Description			Factory defaults	Adj. during run
Frq3	[Frequency setting method]	0 ~ 7	0	Digital	Keypad setting 1	0	X
			1		Keypad setting 2		
			2	Analog	V1 1: –10 ~ +10 [V]		
			3		V1 2: 0 ~ +10 [V]		
			4		Terminal I: 0 ~ 20 [mA]		
			5		Terminal V1 setting 1 + Terminal I		
			6		Terminal V1 setting 2+ Terminal I		
			7		RS485		
rEF	PID Reference	-	PID control standard value setting			0.00	O
FBK	PID Feedback	-	Displays PID Feedback			-	-

7.2 Function group 1

LED display	Parameter name	Min/Max range	Description		Factory defaults	Adj. during run
F0	[Jump code]	0 ~ 64	Sets the parameter code number to jump.		1	O
F1	[Forward/ Reverse run disable]	0 ~ 2	0	Fwd and rev run enable	0	X
			1	Forward run disable		
			2	Reverse run disable		
F2	[Accel pattern]	0 ~ 1	0	Linear	0	X
F3	[Decel pattern]		1	S-curve		
F4	[Stop mode select]	0 ~ 3	0	Decelerate to stop	0	X
			1	DC brake to stop		
			2	Free run to stop		
			3	Power braking stop		
F8 [1)]	[DC Brake start frequency]	0.1 ~ 60 [Hz]	This parameter sets DC brake start frequency. It cannot be set below F23 - [Start frequency].		5.00	X
F9 [1)]	[DC Brake wait time]	0 ~ 60 [sec]	When DC brake frequency is reached, the inverter holds the output for the setting time before starting DC brake.		0.1	X
F10 [1)]	[DC Brake voltage]	0 ~ 200 [%]	This parameter sets the amount of DC voltage applied to a motor. It is set in percent of H33 – [Motor rated current].		50	X
F11 [1)]	[DC Brake time]	0 ~ 60 [sec]	This parameter sets the time taken to apply DC current to a motor while motor is at a stop.		1.0	X
F12	[DC Brake start voltage]	0 ~ 200 [%]	This parameter sets the amount of DC voltage before a motor starts to run. It is set in percent of H33 – [Motor rated current].		50	X
F13	[DC Brake start time]	0 ~ 60 [sec]	DC voltage is applied to the motor for DC Brake start time before motor accelerates.		0	X
F14	[Time for magnetizing a motor]	0 ~ 60 [sec]	This parameter applies the current to a motor for the set time before motor accelerates during Sensorless vector control.		1.0	X
F20	[Jog frequency]	0 ~ 400 [Hz]	This parameter sets the frequency for Jog operation. It cannot be set above F21 – [Max frequency].		10.00	O

[1)]: Displayed only when F4 is set to 1 (DC brake to stop).

LED display	Parameter name	Min/Max range	Description	Factory defaults	Adj. during run
F21 [1]	[Max frequency]	40 ~ 400 [Hz]	This parameter sets the highest frequency the inverter can output. It is frequency reference for Accel/Decel (See H70) Caution: Any frequency cannot be set above Max frequency except Base frequency.	50.00	X
F22	[Base frequency]	30 ~ 400 [Hz]	The inverter outputs its rated voltage to the motor at this frequency (see motor nameplate).	50.00	X
F23	[Start frequency]	0.1 ~ 10 [Hz]	The inverter starts to output its voltage at this frequency. It is the frequency low limit.	0.50	X
F24	[Frequency high/low limit select]	0 ~ 1	This parameter sets high and low limit of run frequency.	0	X
F25 [2]	[Frequency high limit]	0 ~ 400 [Hz]	This parameter sets high limit of the run frequency. It cannot be set above F21 – [Max frequency].	50.00	X
F26 [2]	[Frequency low limit]	0.1 ~ 400 [Hz]	This parameter sets low limit of the run frequency. It cannot be set above F25 - [Frequency high limit] and below F23 – [Start frequency].	0.50	X
F27	[Torque Boost select]	0 ~ 1	0 Manual torque boost 1 Auto torque boost	0	X
F28	[Torque boost in forward direction]	0 ~ 15 [%]	This parameter sets the amount of torque boost applied to a motor during forward run. It is set in percent of Max output voltage.	2	X
F29	[Torque boost in reverse direction]		This parameter sets the amount of torque boost applied to a motor during reverse run. It is set as a percent of Max output voltage	2	X

[1]: If H40 is set to 3 (Sensorless vector), Max. frequency is settable up to 300Hz.

[2]: Displayed only when F24 (Frequency high/low limit select) is set to 1.

LED display	Parameter name	Min/Max range	Description		Factory defaults	Adj. during run
F30	[V/F pattern]	0 ~ 2	0	{Linear}	0	X
			1	{Square}		
			2	{User V/F}		
F31 [1)]	[User V/F frequency 1]	0 ~ 400 [Hz]	It is used only when V/F pattern is set to 2(User V/F). It cannot be set above F21 – [Max frequency]. The value of voltage is set in percent of H70 – [Motor rated voltage]. The values of the lower-numbered parameters cannot be set above those of higher-numbered.		15.00	X
F32 [1)]	[User V/F voltage 1]	0 ~ 100 [%]			25	X
F33 [1)]	[User V/F frequency 2]	0 ~ 400 [Hz]			30.00	X
F34 [1)]	[User V/F voltage 2]	0 ~ 100 [%]			50	X
F35 [1)]	[User V/F frequency 3]	0 ~ 400 [Hz]			45.00	X
F36 [1)]	[User V/F voltage 3]	0 ~ 100 [%]			75	X
F37 [1)]	[User V/F frequency 4]	0 ~ 400 [Hz]			60.00	X
F38 [1)]	[User V/F voltage 4]	0 ~ 100 [%]			100	X
F39	[Output voltage adjustment]	40 ~ 110 [%]	This parameter adjusts the amount of output voltage. The set value is the percentage of input voltage.		100	X
F40	[Energy-saving level]	0 ~ 30 [%]	This parameter decreases output voltage according to load status.		0	0
F50	[Electronic thermal select]	0 ~ 1	This parameter is activated when the motor is overheated (time-inverse).		1	0
F51 [2)]	[Electronic thermal level for 1 minute]	50 ~ 200 [%]	This parameter sets max current capable of flowing to the motor continuously for 1 minute. The set value is the percentage of H33 – [Motor rated current]. It cannot be set below F52 –[Electronic thermal level for continuous].		150	0
F52 [2)]	[Electronic thermal level for continuous]		This parameter sets the max motor current for continuous operation. It cannot be set higher than F51 – [Electronic thermal level for 1 minute].		100	0

[1)]: Set F30 to 2(User V/F) to display this parameter.

[2)]: Set F50 to 1 to display this parameter.

LED display	Parameter name	Min/Max range	Description		Factory defaults	Adj. during run
F53 [2]	[Motor cooling method]	0 ~ 1	0	Standard motor having cooling fan directly connected to the shaft	0	0
			1	A motor using a separate motor to power a cooling fan.		
F54	[Overload warning level]	30 ~ 150 [%]	This parameter sets the amount of current to issue an alarm signal to the relay or multi-function output terminal (see I54, I55). The set value is a percentage of H33-[Motor rated current].		150	0
F55	[Overload warning time]	0 ~ 30 [Sec]	Delay time of the current level set in F54- [Overload warning level]		10	0
F56	[Overload trip select]	0 ~ 1	This parameter turns off the inverter output when motor is overloaded.		1	0
F57	[Overload trip level]	30 ~ 200 [%]	This parameter sets the amount of overload current. The value is the percentage of H33-[Motor rated current].		180	0
F58	[Overload trip time]	0 ~ 60 [Sec]	This parameter turns off the inverter when the current greater than F57-[Overload trip level] flows to the motor for F58- [Overload trip time].		60	0

[2]: Set F50 to 1 to display this parameter.

LED display	Parameter name	Min/Max range	Description	Factory defaults	Adj. during run
F59	[Stall prevention select]	0 ~ 7	This parameter stops accelerating ramp during acceleration, decreases the frequency during constant speed and stops decelerating ramp during deceleration.	0	X

	During Decel	During constant run	During Accel
	Bit 2	Bit 1	Bit 0
0	-	-	-
1	-	-	✓
2	-	✓	-
3	-	✓	✓
4	✓	-	-
5	✓	-	✓
6	✓	✓	-
7	✓	✓	✓

F60	[Stall prevention level]	30 ~ 200 [%]	This parameter sets the amount of current to activate stall prevention function during Acceleration, Constant speed or Deceleration. The set value is the percentage of H33-[Motor rated current].	150	X
F61	[When Stall prevention during deceleration, voltage limit select]	0~1	In Stall prevention run during deceleration, select 1if you want to limit output voltage.		
F63	[Save up/down frequency]	0 ~ 1	This parameter determines whether to save the specified frequency during up/down operation. When 1 is selected, the up/down frequency is saved in F64.	0	X
F64 [1)]	[Saved up/down frequency]	0 ~ 400 [Hz]	If "Save up/down frequency" is selected in F63, this parameter shows the frequency before the inverter stops or decelerates.	0	X
F65	[Up-down mode select]	0~2	You can select the Up-down mode among three options:	0	X

0	Increases goal frequency as a standard of Max. frequency/Min. frequency.
1	Increases as many as step frequencies according to edge input.
2	Available to combine 1 and 2.

[1)]: It is shown when F63 is set to 1.

F66	[Up-down step frequency]	0~400 [Hz]	In case of choosing F65 as 1 or 2, it means increase or decrease of frequency according to up-down input.		0.00	X
F70	[Draw run mode select]	0~3	0	Inverter does not run as in draw mode	0	X
			1	V1(0~10V) input		
			2	I(0~20mA) input		
			3	V1(–10~10V) input		
F71	[Draw rate]	0~100 [%]	Sets rate of draw		0.00	O

7.3 Function group 2

LED display	Parameter name	Min/Max range	Description	Factory defaults	Adj. during run
H0	[Jump code]	0~95	Sets the code number to jump.	1	O
H1	[Fault history 1]	-	Stores information on the types of faults, the frequency, the current and the Accel/Decel condition at the time of fault. The latest fault is automatically stored in the H1- [Fault history 1].	nOn	-
H2	[Fault history 2]	-		nOn	-
H3	[Fault history 3]	-		nOn	-
H4	[Fault history 4]	-		nOn	-
H5	[Fault history 5]	-		nOn	-
H6	[Reset fault history]	0~1	Clears the fault history saved in H1-5.	0	O
H7	[Dwell frequency]	0.1~400 [Hz]	When dwell frequency is issued, the motor restarts to accelerate after dwell frequency is applied to the motor during H8- [Dwell time]. [Dwell frequency] can be set within the range of F21- [Max frequency] and F23- [Start frequency].	5.00	X
H8	[Dwell time]	0~10sec	Sets the time for dwell operation.	0.0	X
H10	[Skip frequency select]	0 ~ 1	Sets the frequency range to skip to prevent undesirable resonance and vibration on the structure of the machine.	0	X
H11 [1)]	[Skip frequency low limit 1]	0.1~400 [Hz]	Run frequency cannot be set within the range from H11 to H16. The frequency values of the low numbered parameters cannot be set above those of the high numbered ones. Settable within the range of F21 and F23.	10.00	X
H12 [1)]	[Skip frequency high limit 1]			15.00	X
H13 [1)]	[Skip frequency low limit 2]			20.00	X
H14 [1)]	[Skip frequency high limit 2]			25.00	X
H15 [1)]	[Skip frequency low limit 3]			30.00	X
H16 [1)]	[Skip frequency high limit 3]			35.00	X
H17	[S-Curve accel/decel start side]	1~100 [%]	Set the speed reference value to form a curve at the start during accel/decel. If it is set higher, linear zone gets smaller.	40	X
H18	[S-Curve accel/decel end side]	1~100 [%]	Set the speed reference value to form a curve at the end during accel/decel. If it is set higher, linear zone gets smaller.	40	X

[1)]: Only displayed when H10 is set to 1. # H17, H18 are used when F2, F3 are set to 1 (S-curve).

LED display	Parameter name	Min/Max range	Description			Factory defaults	Adj. during run
H19	[Input/output phase loss protection select]	0 ~ 3		Input phase protection	Output phase protection	0	O
				Bit 1	Bit 0		
			0	-	-		
			1	-	✓		
			2	✓	-		
			3	✓	✓		
H20	[Power On Start select]	0 ~ 1	This parameter is activated when drv is set to 1 or 2 (Run/Stop via Control terminal). Motor starts acceleration after AC power is applied while FX or RX terminal is ON.			0	O
H21	[Restart after fault reset selection]	0 ~1	This parameter is activated when drv is set to 1 or 2 (Run/Stop via Control terminal). Motor accelerates after the fault condition is reset while the FX or RX terminal is ON.			0	O
H22 [1)]	[Speed Search Select]	0 ~ 15	This parameter is activated to prevent any possible fault if is necessary to start the inverter while the motor is running.			0	O

	1. H20-[Power On start]	2.Restart after instant power failure	3. Operation after fault	4. Normal accel
	Bit 3	Bit 2	Bit 1	Bit 0
0	-	-	-	-
1	-	-	-	✓
2	-	-	✓	-
3	-	-	✓	✓
4	-	✓	-	-
5	-	✓	-	✓
6	-	✓	✓	-
7	-	✓	✓	✓
8	✓	-	-	-
9	✓	-	-	✓
10	✓	-	✓	-
11	✓	-	✓	✓
12	✓	✓	-	-
13	✓	✓	-	✓
14	✓	✓	✓	-
15	✓	✓	✓	✓

[1)]: Normal acceleration has first priority. Even though #4 is selected along with other bits, Inverter performs Speed search #4.

LED display	Parameter name	Min/Max range	Description	Factory defaults	Adj. during run
H23	[Current level during Speed search]	80~200 [%]	This parameter limits the amount of current during speed search. The set value is the percentage of the H33- [Motor rated current].	100	O
H24	[P gain during Speed search]	0~9999	It is the Proportional gain used for Speed Search PI controller.	100	O
H25	[I gain during speed search]	0~9999	It is the Integral gain used for Speed search PI controller.	200	O
H26	[Number of Auto Restart try]	0 ~10	This parameter sets the number of restart attempts after a fault occurs. Auto Restart is deactivated if the fault outnumbers the restart tries. This function is active when [drv] is set to 1 or 2 {Run/Stop via control terminal}. Deactivated during active protection function (OHT, LVT, EXT, HWT etc.).	0	O
H27	[Auto Restart time]	0~60 [sec]	This parameter sets the time between restart tries.	1.0	O
H30	[Motor type select]	0.2~22.0	0.2 — 0.2kW ~ — ~ 22.0 — 22.0kW	**7.5** [1)]	X
H31	[Number of motor poles]	2 ~ 12	This setting is displayed via rPM in drive group.	4	X
H32	[Rated slip frequency]	0 ~ 10 [Hz]	$f_s = f_r - \left(\frac{rpm \times P}{120}\right)$ Where, f_s = Rated slipx1 frequency f_r = Rated frequency rpm = Motor nameplate RPM P = Number of Motor poles	**2.33** [1)]	X
H33	[Motor rated current]	0.5~50 [A]	Enter motor rated current on the nameplate.	**26.3** [1)]	X
H34	[No load motor current]	0.1~ 20 [A]	Enter the current value detected when the motor is rotating in rated rpm after the load connected to the motor shaft is removed. Enter the 50% of the rated current value when it is difficult to measure H34 - [No Load Motor Current].	**11** [1)]	X
H36	[Motor efficiency]	50~100 [%]	Enter the motor efficiency (see motor nameplate).	**87** [1)]	X

[1)]: H30 is preset based on the inverter ratings.

LED display	Parameter name	Min/Max range	Description		Factory defaults	Adj. during run
H37	[Load inertia rate]	0 ~ 2	Select one of the following according to motor inertia.		0	X
			0	Less than 10 times		
			1	About 10 times		
			2	More than 10 times		
H39	[Carrier frequency select]	1 ~ 15 [kHz]	This parameter affects the audible sound of the motor, noise emission from the inverter, inverter temp, and leakage current. If the set value is higher, the motor sound is quieter but the noise from the inverter and leakage current will become greater.		3	O
H40	[Control mode select]	0 ~ 3	0	{Volts/frequency Control}	0	X
			1	{Slip compensation control}		
			2	-		
			3	{Sensorless vector control}		
H41	[Auto tuning]	0 ~ 1	If this parameter is set to 1, it automatically measures parameters of the H42 and H44.		0	X
H42	[Stator resistance (Rs)]	0 ~ 14 [Ω]	This is the value of the motor stator resistance.		-	X
H44	[Leakage inductance (Lσ)]	0~ 300.0 [mH]	This is leakage inductance of the stator and rotor of the motor.		-	X
H45 [1)]	[Sensorless P gain]	0~ 32767	P gain for Sensorless control		1000	O
H46 [1)]	[Sensorless I gain]		I gain for Sensorless control		100	O
H47 [1)]	[Sensorless torque limit]	100~220 [%]	Limits output torque in Sensorless mode		180.0	X
H48 [1)]	[PWM mode select]	0~1	If you want to limit the inverter leakage current, select 2 phase PWM mode. It has more noise in comparison to Normal PWM mode.		0	X
			0	Normal PWM mode		
			1	2 phase PWM mode		
H49 [1)]	[PID Control Select]	0~1	Selects whether using PID control or not		0	X
H50 [2)]	[PID feedback select]	0 ~ 2	0	Terminal I input (0 ~ 20 mA)	0	X
			1	Terminal V1 input (0 ~ 10 V)		
			2	RS485		
H51 [2)]	[P gain for PID controller]	0~ 999.9 [%]	This parameter sets the gains for the PID controller.		300.0	O

LED display	Parameter name	Min/Max range	Description		Factory defaults	Adj. during run
H52 [2]	[Integral time for PID controller (I gain)]	0.1~32.0 [sec]			1.0	O
H53 [2]	[Differential time for PID controller (D gain)]	0 ~ 30.0 [sec]			0.0	O
H54 [2]	[PID control mode select]]	0 ~ 1	Selects PID control mode		0	X
			0	Normal PID control		
			1	Process PID control		
H55 [2]	[PID output frequency high limit]	0.1~400[Hz]	This parameter limits the amount of the output frequency through the PID control. The value is settable within the range of F21 – [Max frequency] and F23 – [Start frequency].		50.00	O
H56 [2]	[PID output frequency low limit]	0.1~400[Hz]			0.50	O
H57	[PID reference source select]	0~4	Selects PID reference source. Reference is indicated in “rEF” of Drive group.		0	X
			0	Keypad digital setting 1		
			1	Keypad digital setting 2		
			2	V1 terminal setting 2: 0~10V		
			3	I terminal setting: 0~20mA		
			4	Setting as RS-485 communication		
H59	Inverse PID	0 ~ 1	0	Normal	0	X
			1	Inverse		
H60	[Self-diagnostic select]	0 ~ 3	0	Self-diagnostic disabled	0	X
			1	IGBT fault/Ground fault		
			2	Output phase short & open/ Ground fault		
			3	Ground fault		

[1]: Set H40 to 3 (Sensorless vector control) to display this parameter.

[2]: Set H40 to 2 (PID control) to display this parameter.

LED display	Parameter name	Min/Max range	Description		Factory defaults	Adj. durin g run
H61	Sleep delay time	0~999 (sec)	Sleep Mode delay time		60 sec	X
H62	Sleep frequency	0~400Hz	Sleep Frequency		0.0Hz	O
H63	Wake-up level	0~50[%]	Wake Up level		2[%]	O
H64	[KEB select]	0~1	Sets the KEB		0	X
H65	[KEB action start level]	110~140[%]	Sets KEB action start level according to level.		125.0	X
H66	[KEB action stop level]	110~145[%]	Sets KEB action stop level according to level.		130.0	X
H67	[KEB action gain]	1~20000	Sets KEB action gain.		1000	X
H69	Accel/Decel Change Frequency	0 ~ 400Hz	Accel/decel change frequency		0Hz	X
H70	[Frequency Ref. for Accel/Decel]	0 ~ 1	0	Based on Max freq (F21)	0	X
			1	Based on Delta freq.		
H71	[Accel/Decel time scale]	0 ~ 2	0	Settable unit: 0.01 second.	1	O
			1	Settable unit: 0.1 second.		
			2	Settable unit: 1 second.		
H72	[Power on display]	0 ~ 17	This parameter selects the parameter to be displayed on the keypad when the input power is first applied.		0	O
			0	Frequency command		
			1	Accel time		
			2	Decel time		
			3	Drive mode		
			4	Frequency mode		
			5	Multi-step frequency 1 (St1)		
			6	Multi-step frequency 2 (St2)		
			7	Multi-step frequency 3 (St3)		
			8	Output current (Cur)		
			9	Motor rpm (rPM)		
			10	Inverter DC link voltage (dCL)		
			11	User display select (vOL)		
			12	Fault display 1(nOn)		
			13	Operating direction select (drC)		
			14	Output current 2		
			15	Motor rpm 2		
			16	Inverter DC link voltage 2		
			17	User display select 2		

LED display	Parameter name	Min/Max range	Description		Factory defaults	Adj. during run
H73	[Monitoring item select]	0 ~ 2	One of the following can be monitored via vOL - [User display select].		0	O
			0	Output voltage [V]		
			1	Output power [kW]		
			2	Torque [kgf · m]		
H74	[Gain for Motor rpm display]	1 ~ 1000 [%]	This parameter is used to change the motor rotating speed (r/min) to mechanical speed (m/mi) and display it.		100	O
H75	[DB resistor operating rate limit select]	0 ~ 1	0	Unlimited	1	O
			1	Use DB resistor for the H76 set time.		
H76	[DB resistor operating rate]	0 ~ 30[%]	Set the percent of DB resistor operating rate to be activated during one sequence of operation.		10	O
H77 [1)]	[Cooling fan control]	0 ~ 1	0	Always ON	0	O
			1	Keeps ON when its temp is higher than inverter protection limit temp. Activated only during operation when its temp is below that of inverter protection limit.		
H78	[Operating method select when cooling fan malfunctions]	0 ~ 1	0	Continuous operation when cooling fan malfunctions.	0	O
			1	Operation stopped when cooling fan malfunctions.		
H79	[S/W version]	0 ~ 10.0	This parameter displays the inverter software version.		1.0	X
H81	[2nd motor Accel time]	0 ~ 6000 [sec]	This parameter actives when the selected terminal is ON after I17-I24 is set to 12 {2nd motor select}.		5.0	O
H82	[2nd motor Decel time]				10.0	O
H83	[2nd motor base frequency]	30 ~ 400 [Hz]			50.00	X
H84	[2nd motor V/F pattern]	0 ~ 2			0	X
H85	[2nd motor forward torque boost]	0 ~ 15 [%]			5	X

[1)]: Exception: Since Sinus M-0001 2S/T - Sinus M 0001 4T is Natural convection type, this code is hidden.

LED display	Parameter name	Min/Max range	Description	Factory defaults	Adj. during run
H86	[2nd motor reverse torque boost]	0 ~ 15 [%]	This parameter actives when the selected terminal is ON after I17-I24 is set to 12 {2nd motor select}.	5	X
H87	[2nd motor stall prevention level]	30~150 [%]		150	X
H88	[2nd motor Electronic thermal level for 1 min]	50~200 [%]		150	O
H89	[2nd motor Electronic thermal level for continuous]			100	O
H90	[2nd motor rated current]	0.1~50 [A]		26.3	X
H91 [1)]	[Parameter read]	0 ~ 1	Copy the parameters from inverter and save them into remote keypad.	0	X
H92 [1)]	[Parameter write]	0 ~ 1	Copy the parameters from remote keypad and save them into inverter.	0	X
H93	[Parameter initialize]	0 ~ 5	This parameter is used to initialize parameters back to the factory default value. 0 - 1 All parameter groups are initialized to factory default value. 2 Only Drive group is initialized. 3 Only Function group 1 is initialized. 4 Only Function group 2 is initialized. 5 Only I/O group is initialized.	0	X
H94	[Password register]	0 ~ FFFF	Password for H95-[Parameter lock]. Set as Hex value.	0	O
H95	[Parameter lock]	0 ~ FFFF	This parameter is able to lock or unlock parameters by typing password registered in H94. UL (Unlock) Parameter change enable L (Lock) Parameter change disable	0	O

[1)]: H91,H92 parameters are displayed when the Remote option is installed.

7.4 I/O group 2

LED display	Parameter name	Min/Max range	Description	Factory defaults	Adj. during run
I0	[Jump code]	0 ~ 81	Sets the code number to jump.	1	O
I1	[Filter time constant for NV input]	0 ~ 9999	Adjusts the responsiveness of NV input (–10V~0V).	10	O
I2	[NV input Min voltage]	0 ~ –10 [V]	Sets the minimum negative input voltage of V1 (–10V~0V) input.	0.00	O
I3	[Frequency corresponding to I2]	0 ~ 400 [Hz]	Sets the inverter output minimum frequency at minimum negative voltage of I2.	0.00	O
I4	[NV input Max voltage]	0 ~ –10 [V]	Sets the maximum negative input voltage of the V1 input (–10V~0V).	10.0	O
I5	[Frequency corresponding to I4]	0 ~ 400 [Hz]	Sets the inverter output maximum frequency at maximum negative voltage of I4.	50.00	O
I6	[Filter time constant for V1 input]	0 ~ 9999	Adjusts the responsiveness of V1 input (0 ~ +10V).	10	O
I7	[V1 input Min voltage]	0 ~ 10 [V]	Sets the minimum positive voltage of the V1 input.	0	O
I8	[Frequency corresponding to I7]	0 ~ 400 [Hz]	Sets the inverter output minimum frequency at minimum positive voltage of I7.	0.00	O
I9	[V1 input Max voltage]	0 ~ 10 [V]	Sets the maximum positive voltage of the V1 input.	10	O
I10	[Frequency corresponding to I9]	0 ~ 400 [Hz]	Sets the inverter output maximum frequency at maximum positive voltage of I9.	50.00	O
I11	[Filter time constant for I input]	0 ~ 9999	Sets the input section's internal filter constant for I input.	10	O
I12	[I input Min current]	0 ~ 20 [mA]	Sets the minimum current of I input.	4.00	O
I13	[Frequency corresponding to I12]	0 ~ 400 [Hz]	Sets the inverter output minimum frequency at minimum current of I input.	0.00	O
I14	[I input Max current]	0 ~ 20 [mA]	Sets the Maximum current of I input.	20.00	O
I15	[Frequency corresponding to I14]	0 ~ 400 [Hz]	Sets the inverter output maximum frequency at maximum current of I input.	50.00	O
I16	[Criteria for Analog Input Signal loss]	0 ~ 2	0: Disabled 1: activated below half of set value. 2: activated below set value.	0	O

LED display	Parameter name	Min/Max range	Description	Factory defaults	Adj. during run	LED display
I17	[Multi-function input terminal P1 define]	0 ~ 29	0	Forward run command	0	O
			1	Reverse run command		
I18	[Multi-function input terminal P2 define]		2	Emergency Stop (Est)	1	O
			3	Reset when a fault occurs {RST}		
I19	[Multi-function input terminal P3 define]		4	Jog operation command	2	O
			5	Multi-Step freq – Low		
I20	[Multi-function input terminal P4 define]		6	Multi-Step freq – Mid	3	O
			7	Multi-Step freq – High		
I21	[Multi-function input terminal P5 define]		8	Multi Accel/Decel – Low	4	O
			9	Multi Accel/Decel – Mid		
I22	[Multi-function input terminal P6 define]		10	Multi Accel/Decel – High	5	O
			11	DC brake during hold		
I23	[Multi-function input terminal P7 define]		12	2nd motor select	6	O
			13	-Reserved-		
I24	[Multi-function input terminal P8 define]		14	-Reserved-	7	O
			15	Up-down: Frequency increase (UP) command		
			16	Up-down: Frequency decrease command (DOWN)		
			17	3-wire operation		
			18	External trip: A Contact (EtA)		
			19	External trip: B Contact (EtB)		
			20	Self-diagnostic function		
			21	Change from PID operation to normal operation		
			22	2nd source select		
			23	Analog Hold		
			24	Accel/Decel hold		
			25	Up/Down Save Freq. Initialization		
			26	JOG-FX		
			27	JOG-RX		
			28	Open Loop1		
			29	Fire Mode		

* See “Chapter 14 Troubleshooting and maintenance” for External trip A/B contact.

* Each multi-function input terminal must be set differently.

LED display	Parameter name	Min/Max range	Description	Factory default	Adj. during run
I25	[Input terminal status display]	BIT 7 / BIT 6 / BIT 5 / BIT 4 / BIT 3 / BIT 2 / BIT 1 / BIT 0 P8 / P7 / P6 / P5 / P4 / P3 / P2 / P1		0	O
I26	[Output terminal status display]	BIT1 / BIT0 3AC / MO		0	O
I27	[Filtering time constant for Multi-function Input terminal]	1 ~ 15	If the value is set higher, the responsiveness of the Input terminal is getting slower.	4	O
I30	[Multi-Stepfrequency4]	0 ~ 400 [Hz]	It cannot be set greater than F21 – [Max frequency].	30.00	O
I31	[Multi-Stepfrequency5]			25.00	O
I32	[Multi-Stepfrequency6]			20.00	O
I33	[Multi-Stepfrequency7]			15.00	O
I34	[Multi-Accel time 1]	0~ 6000 [sec]		3.0	O
I35	[Multi-Decel time 1]			3.0	
I36	[Multi-Accel time 2]			4.0	
I37	[Multi-Decel time 2]			4.0	
I38	[Multi-Accel time 3]			5.0	
I39	[Multi-Decel time 3]			5.0	
I40	[Multi-Accel time 4]			6.0	
I41	[Multi-Decel time 4]			6.0	
I42	[Multi-Accel time 5]			7.0	
I43	[Multi-Decel time 5]			7.0	
I44	[Multi-Accel time 6]			8.0	
I45	[Multi-Decel time 6]			8.0	
I46	[Multi-Accel time 7]			9.0	
I47	[Multi-Decel time 7]			9.0	
I50	[Analog output item select]	0 ~ 3	Output item: 0 Output freq. — Output to 10[V]: Max frequency 1 Output current — 150 % 2 Output voltage — 200V (2S/T): AC 282V; 400V (4T): AC 564V 3 Inverter DC link voltage — 200V (2S/T): DC 400V; 400V (4T): DC 800V	0	O

LED display	Parameter name	Min/Max range	Description		Factory default	Adj. during run
I51	[Analog output level adjustment]	10~200 [%]	Based on 10V.		100	O
I52	[Frequency detection level]	0 ~ 400 [Hz]	Used when I54 or I55 is set to 0-4. Cannot be set higher than F21.		30.00	O
I53	[Frequency detection bandwidth]				10.00	O
I54	[Multi-function output terminal select]	0 ~ 19	0	FDT-1	12	O
			1	FDT-2		
I55	[Multi-function relay select]		2	FDT-3	17	
			3	FDT-4		
			4	FDT-5		
			5	Overload (OLt)		
			6	Inverter Overload (IOLt)		
			7	Motor stall (STALL)		
			8	Over voltage trip (Ovt)		
			9	Low voltage trip (Lvt)		
			10	Inverter Overheat (OHt)		
			11	Command loss		
			12	During Run		
			13	During Stop		
			14	During constant run		
			15	During speed searching		
			16	Wait time for run signal input		
			17	Fault output		
			18	Warning for cooling fan trip		
			19	Brake signal selection		

LED display	Parameter name	Min/Max range	Description				Factory defaults	Adj. during run
I56	[Fault relay output]	0 ~ 7		When setting the H26–[Number of auto restart try]	When the trip other than low voltage trip occurs	When the low voltage trip occurs	2	O
				Bit 2	Bit 1	Bit 0		
			0	-	-	-		
			1	-	-	✓		
			2	-	✓	-		
			3	-	✓	✓		
			4	✓	-	-		
			5	✓	-	✓		
			6	✓	✓	-		
			7	✓	✓	✓		
I57	[Output terminal select when communication error occurs]	0 ~ 3		Multi-function relay	Multi-function output terminal		0	O
				Bit 1	Bit 0			
			0	-	-			
			1	-	✓			
			2	✓	-			
			3	✓	✓			
I59	[Communication protocol select]	0 ~ 1	Set communication protocol.				0	X
			0	Modbus RTU				
			1	ES BUS				
I60	[Inverter number]	1 ~ 250	Set for RS485 communication				1	O
I61	[Baud rate]	0 ~ 4	Select the Baud rate of the RS485.				3	O
			0	1200 [bps]				
			1	2400 [bps]				
			2	4800 [bps]				
			3	9600 [bps]				
			4	19200 [bps]				
I62	[Drive mode select after loss of frequency command]	0 ~ 2	It is used when freq command is given via V1 /I terminal or RS485.				0	O
			0	Continuous operation at the frequency before its command is lost.				
			1	Free Run stop (Output cut-off)				
			2	Decel to stop				

I63	[Wait time after loss of frequency command]	0.1 ~ 120 [sec]	This is the time inverter determines whether there is the input frequency command or not. If there is no frequency command input during this time, inverter starts operation via the mode selected at I62.	1.0	O
I64	[Communication time setting]	2 ~ 100 [ms]	Frame communication time	5	O
I65	[Parity/stop bit setting]	0~3	When the protocol is set, the communication format can be set. 0 Parity: None, Stop Bit: 1 1 Parity: None, Stop Bit: 2 2 Parity: Even, Stop Bit: 1 3 Parity: Odd, Stop Bit: 1	0	O
I66	[Read address register 1]	0~42239	The user can register up to 8 discontinuous addresses and read them all with one Read command.	5	O
I67	[Read address register 2]			6	
I68	[Read address register 3]			7	
I69	[Read address register 4]			8	
I70	[Read address register 5]			9	
I71	[Read address register 6]			10	
I72	[Read address register 7]			11	
I73	[Read address register 8]			12	
I74	[Write address register 1]	0~42239	The user can register up to 8 discontinuous addresses and write them all with one Write command	5	O
I75	[Write address register 2]			6	
I76	[Write address register 3]			7	
I77	[Write address register 4]			8	
I78	[Write address register 5]			5	
I79	[Write address register 6]			6	
I80	[Write address register 7]			7	
I81	[Write address register 8]			8	

LED display	Parameter name	Min/Max range	Description	Factory defaults	Adj. during run
I82	[Brake open current]	0~180 [%]	Sets current level to open the brake. It is set according to H33's (motor rated current) size	50.0	O
I83	[Brake open delay time]	0~10 [s]	Sets Brake open delay time.	1.00	X
I84	[Brake open FX frequency]	0~400 [Hz]	Sets FX frequency to open the brake	1.00	X
I85	[Brake open RX frequency]	0~400 [Hz]	Sets RX frequency to open the brake	1.00	X
I86	[Brake close delay time]	0~19 [s]	Sets delay time to close the brake	1.00	X
I87	[Brake close frequency]	0~400 [Hz]	Sets frequency to close the brake	2.00	X
I88	Fire Mode Frequency	0.0 ~ 400.0 Hz	Command frequency when in Fire Mode	50.0Hz	O
I89	PID F/B minimum scaling factor	0.0 ~ 100.0	PID F/B minimum scaling factor	0.0	O
I90	PID F/B maximum scaling factor	0.0 ~ 100.0	PID F/B maximum scaling factor	100.0	O
I91	A, B Contact type selection	0	A Contact (Normal open)	0	O
		1	B Contact (Normal Close)		
I92	MO On delay	0.0~10.0 sec	MO Contact On delay time	0.0 sec	X
I93	MO Off delay	0.0~10.0 sec	MO Contact Off delay time	0.0 sec	X
I94	30A,B,C On delay	0.0~10.0 sec	30 A,B,C Contact On delay time	0.0 sec	X
I95	30A,B,C Off delay	0.0~10.0 sec	30 A,B,C Contact Off delay time	0.0 sec	X
I96	Fire Mode Evidence	0 ~ 1	0 : No trip during fire mode	-	-
			1 : Trip during fire mode		

CHAPTER 8 - CONTROL BLOCK DIAGRAM

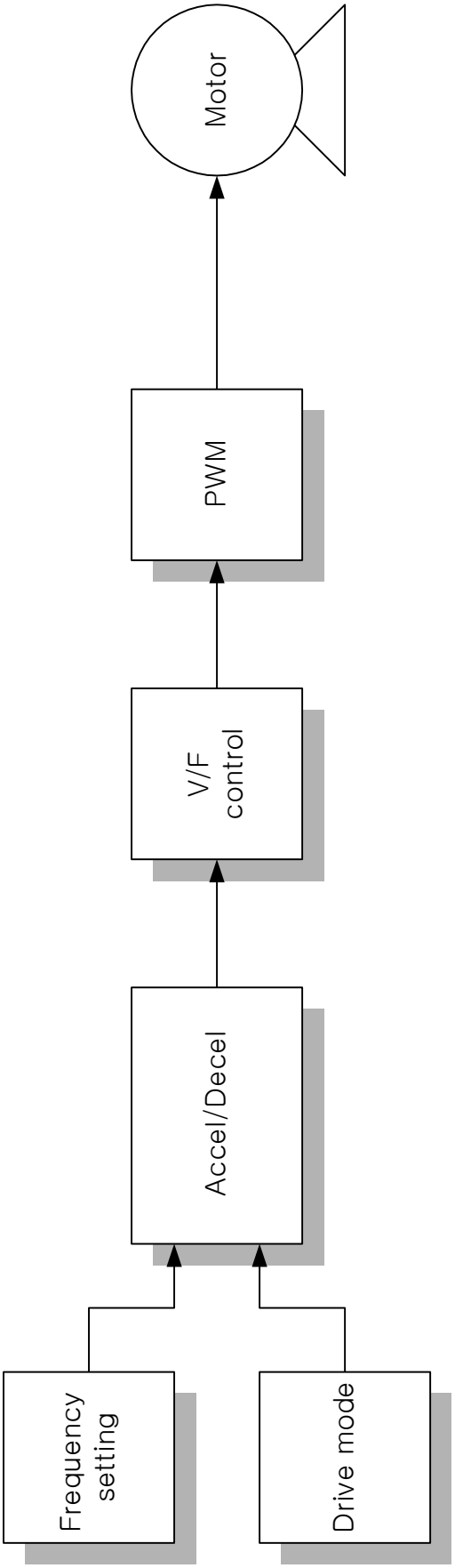

8.1 Frequency and Drive mode setting

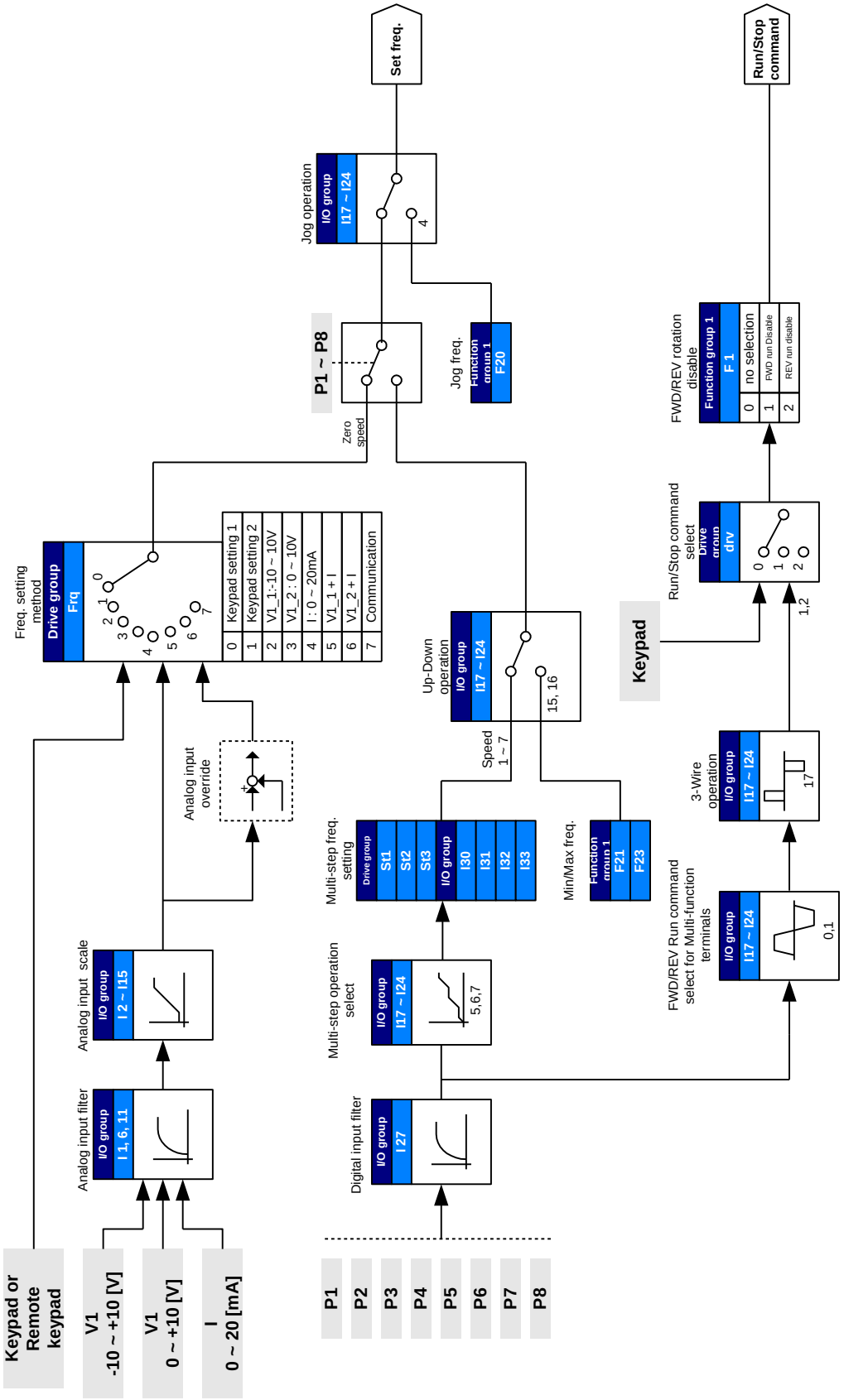

8.2 Accel/Decel setting and V/F control

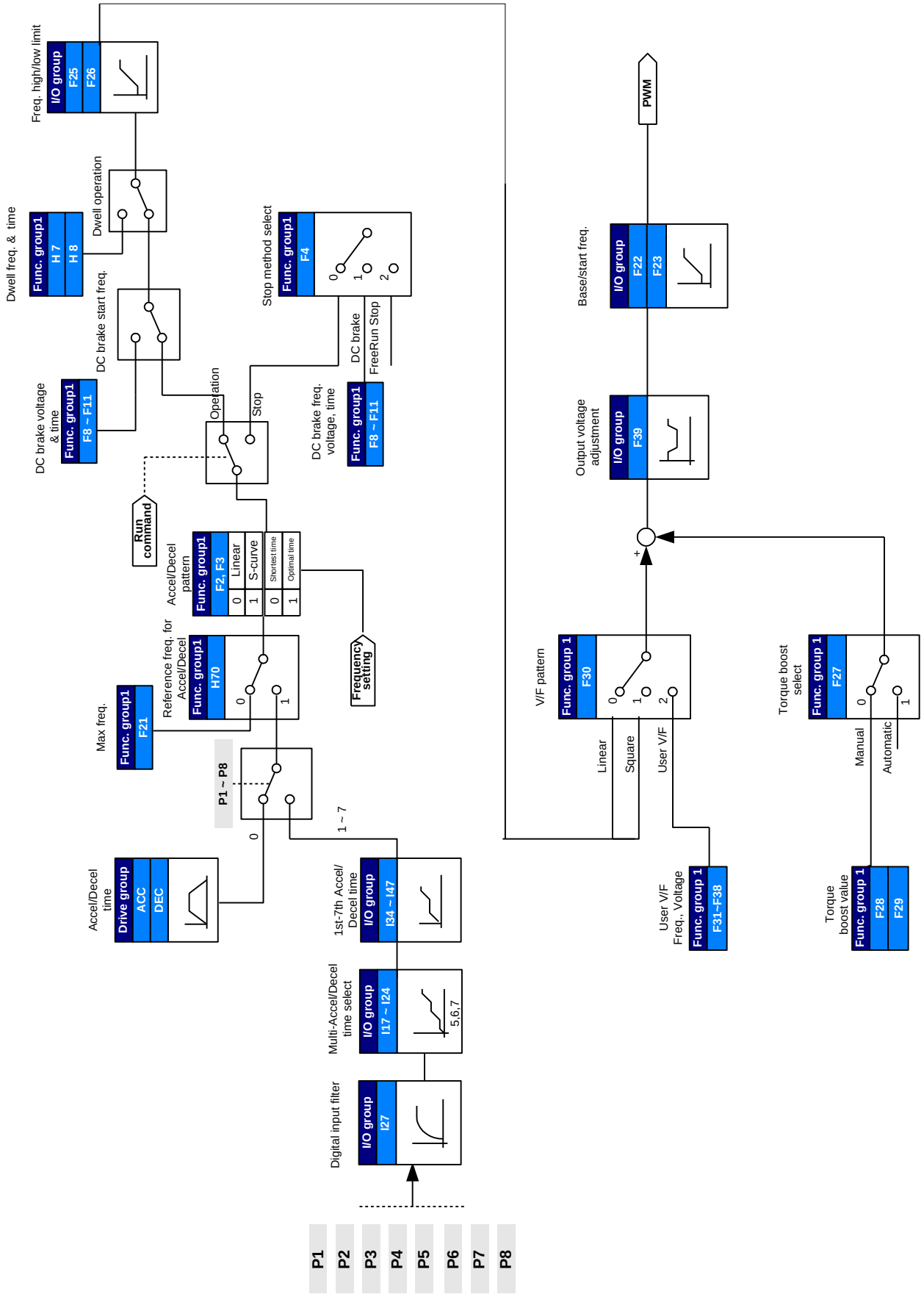

Notes:

CHAPTER 9 - BASIC FUNCTIONS

9.1 Frequency mode

- Keypad Frequency setting 1

Group	Code	Parameter Name	Setting	Range	Initial	Unit
Drive group	0.00	[Frequency Command]	-	0 ~ 400	0.00	Hz
	Frq	**[Frequency mode]**	**0**	0 ~ 7	0	

- Set **Frq** – [Frequency mode] to 0 {Frequency setting via Keypad 1}.
- Set the desired frequency in **0.00** and press the Prog/Ent (●) key to enter the value into memory.
- The value is settable less than **F21** – [Max frequency].

▸ When remote keypad is connected, keypad keys on the body are deactivated.

- Keypad Frequency setting 2

Group	Code	Parameter Name	Setting	Range	Initial	Unit
Drive group	0.00	[Frequency Command]	-	0 ~ 400	0.00	Hz
	Frq	**[Frequency mode]**	**1**	0 ~ 7	0	

- Set **Frq** – [Frequency mode] to 1{Frequency setting via Keypad 2}.
- In **0.00**, frequency is changed upon pressing the Up (▲)/Down (▼) key. In this case, UP/Down keys serve as a potentiometer.
- The value is settable less than **F21** – [Max frequency].

▸ When remote keypad is connected, keypad keys on the body are deactivated.

- Frequency setting via –10 ~ +10[V] input

Group	Code	Parameter Name	Setting	Range	Initial	Unit
Drive group	0.00	[Frequency Command]	-	0 ~400	0.00	Hz
	Frq	**[Frequency Mode]**	**2**	0 ~ 8	0	
I/O group	I1	[Filter time constant for negative input V1]	10	0 ~ 9999	10	
	I2	[V1 input minimum negative voltage]	-	0 ~ –10	0.0	V
	I3	[Frequency corresponding to I2]	-	0 ~ 400	0.00	Hz
	I4	[V1 input max. negative voltage]	-	0 ~ 10	10.00	V
	I5	[Frequency corresponding to I4]	-	0 ~ 400	50.00	Hz
	I6 ~ I10	[V1 input positive]				

- Set **Frq** – [Frequency Mode] to 2.
- The set frequency can be monitored in **0.00** - [Frequency Command].

▸ Apply –10V ~ +10V signal between V1 and CM terminal.

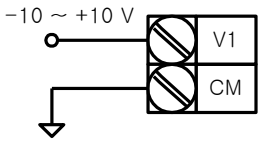

When using −10 ~ 10V from external circuit

▸ Output frequency corresponding to –10V ~ +10V input voltage to V1 terminal

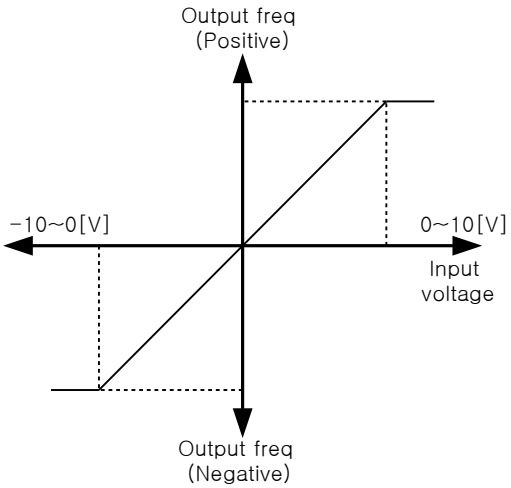

- I1 (Filter time constant for NV input): Effective for eliminating noise in the frequency setting circuit. Increase the filter time constant if steady operation cannot be performed due to noise. A larger setting results in slower response (t gets longer).

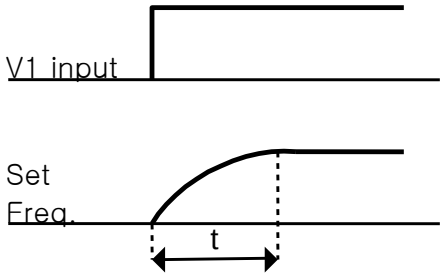

- I2 ~ I5: Setting input range and corresponding frequency to –10V ~ 0V V1 input voltage

  Ex) when minimum (–) input voltage is -2V with corresponding frequency 10Hz and Max voltage is –8V with run freq. 50Hz.

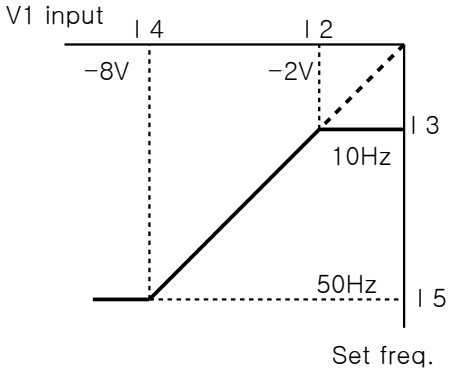

- I6 ~ I10: Setting input range and corresponding frequency to 0 ~ +10V V1 input voltage

  Ex) when minimum (+) input voltage is 2V (I7) with corresponding frequency 10Hz (I8) and Max voltage is +8V (I9) with run freq. 50Hz (I10).

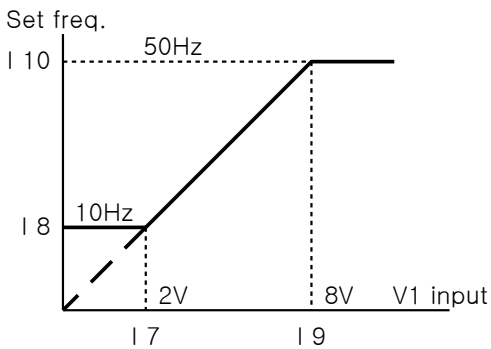

- Frequency setting via 0 ~ 10 [V] input or Terminal Potentiometer

Group	Code	Parameter Name	Setting	Range	Initial	Unit
Drive group	0.00	[Frequency Command]	-	0 ~400	0.00	Hz
	Frq	**[Frequency Mode]**	**3**	0 ~ 8	0	
I/O group	I6	[Filter time constant for V1 input]	10	0 ~ 9999	10	
	I7	[V1 input Min voltage]	-	0 ~ 10	0	V
	I8	[Frequency corresponding to I7]	-	0 ~ 400	0.00	Hz
	I9	[V1 input max voltage]	-	0 ~ 10	10	V
	I10	[Frequency corresponding to I9]	-	0 ~ 400	50.00	Hz

- Select 3 in Frq code of Drive group.
- 0-10V can be directly applied from an external controller or a potentiometer connected on terminals VR, V1 and CM.

▶ Wire the terminals as shown below and refer to page 79 for I6 ~ I10.

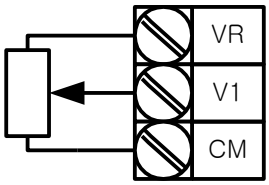

Wiring of potentiometer

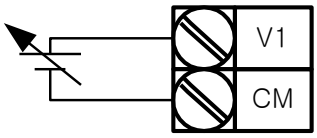

0 ~ 10V input via external controller

- Frequency setting via 0 ~ 20 [mA] input

Group	Code	Parameter Name	Setting	Range	Initial	Unit
Drive group	0.00	[Frequency Command]	-	0 ~400	0.00	Hz
	Frq	**[Frequency Mode]**	**4**	0 ~ 8	0	
I/O group	I11	[Filter time constant for I input]	10	0 ~ 9999	10	
	I12	[I input minimum current]	-	0 ~ 20	4	mA
	I13	[Frequency corresponding to I12]	-	0 ~ 400	0.00	Hz
	I14	[I input max current]	-	0 ~ 20	20	mA
	I15	[Frequency corresponding to I14]	-	0 ~ 400	50.00	Hz

- Select 4 in Frq code of Drive group.
- Frequency is set via 0~20mA input between I and CM terminal.

- Frequency setting via –10 ~ +10[V] voltage input + 0 ~ 20[mA] input

Group	Code	Parameter Name	Setting	Range	Initial	Unit
Drive group	0.00	[Frequency Command]	-	0 ~400	0.00	Hz
	Frq	**[Frequency Mode]**	**5**	0 ~ 8	0	

- Select 5 in Frq code of Drive group.
- This setting mode is available using I/V1 frequency adjustment via V1 and I terminal.
- Related codes: I2 ~ I5, I6 ~ I10, I11 ~ I15

▸ This setting mode is used to gain precise control and fast response by combining I and V1 speed inputs. For example a fast response can be achieved by 0 ~ 20mA (I) speed and precise control can be accomplished by –10 ~ +10[V1] speed if the are set them differently

Example:

Group	Code	Parameter Name	Setting	Unit
I/O group	I2	[V1 input Min negative voltage]	0	V
	I3	[Frequency corresponding to I2]	0.00	Hz
	I4	[V1 input Max negative voltage]	10.00	V
	I5	[Frequency corresponding to I4]	5.00	Hz
	I7	[V1 input Min negative voltage]	0	V
	I8	[Frequency corresponding to I7]	0.00	Hz
	I9	[V1 input max positive voltage]	10	V
	I10	[Frequency corresponding to I9]	5.00	Hz
	I12	[Input minimum current]	4	mA
	I13	[Frequency corresponding to I12]	0.00	Hz
	I14	[Input max current]	20	mA
	I15	[Frequency corresponding to I14]	50.00	Hz

▸ After the above setting is made, if 5V is applied to V1 with 12mA given to terminal I, output frequency would be 27.5Hz. If –5V is applied to V1 terminal with 12mA given to terminal I, output frequency would be 22.5Hz.

- Frequency setting via 0 ~ 10[V] + 0 ~ 20[mA] input

Group	Code	Parameter Name	Setting	Range	Initial	Unit
Drive group	0.00	[Frequency Command]	-	0 ~400	0.00	Hz
	Frq	**[Frequency Mode]**	**6**	0 ~ 8	0	

- Select 6 in Frq code of Drive group.
- Related code: I6 ~ I10, I11 ~ I15
- Refer to Frequency setting via –10 ~ +10V voltage input + 0 ~ 20mA input.

- Frequency setting via RS 485 communication

Group	Code	Parameter Name	Setting	Range	Initial	Unit
Drive group	0.0	[Frequency Command]	-	0 ~400	0.00	Hz
	Frq	**[Frequency Mode]**	**7**	0 ~ 8	0	

- Select 7 in Frq code of Drive group.
- Related codes: I59, I60, I61
- Refer to Chapter 13. RS485 communication.

- Frequency setting via Digital Volume (up-down)

Group	Code	Parameter Name	Setting	Range	Initial	Unit
Drive group	0.0	[Frequency Command]	-	0 ~400	0.00	Hz
	Frq	**[Frequency Mode]**	**8**	0 ~ 8	0	

- Select 8 in Frq code of Drive group.
- Related codes: I17 ~ 24.
- Among the multifunction inputs (P1 ~ P8), select two terminals to be used for up-down.
- Refer to Chapter 7, I/O 2 Group.

- Analog Hold

Group	Code	Parameter Name	Setting	Range	Initial	Unit
Drive group	**Frq**	**[Frequency Mode]**	**2 ~ 7**	0 ~ 7	0	
I/O group	I17	[Multi-function input terminal P1 define]	-	0 ~ 29	0	
	~	~				
	I24	**[Multi-function input terminal P8 define]**	**23**		7	

- It is available when Frq code setting is 2 ~ 7.
- Select one terminal to be used for Analog Hold command among Multi-function input terminal (P1 ~ P8).

▸ When P8 terminal is selected,

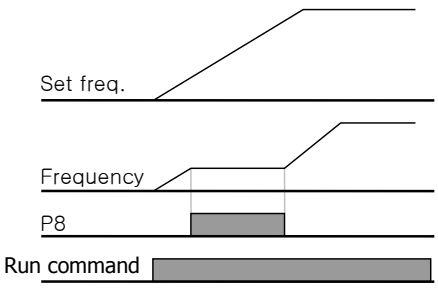

9.2 Multi-Step Frequency setting

Group	Code	Parameter Name	Setting	Range	Initial	Unit
Drive group	0.0	[Frequency Command]	5.0	0 ~ 400	0.00	Hz
	Frq	[Frequency Mode]	0	0 ~ 7	0	-
	St1	[Multi-Step frequency 1]	-	0 ~ 400	10.00	Hz
	St2	[Multi-Step frequency 2]	-		20.00	
	St3	[Multi-Step frequency 3]	-		30.00	
I/O group	**I22**	**[Multi-function input terminal P6 define]**	**5**	0 ~ 29	5	-
	I23	**[Multi-function input terminal P7 define]**	**6**		6	-
	I24	**[Multi-function input terminal P8 define]**	**7**		7	-
	I30	[Multi-Step frequency 4]	-	0 ~ 400	30.00	Hz
	I31	[Multi-Step frequency 5]	-		25.00	
	I32	[Multi-Step frequency 6]	-		20.00	
	I33	[Multi-Step frequency 7]	-		15.00	

- Select a terminal to give Multi-step frequency command among P1-P8 terminals.
- If terminals P6-P8 are selected, set I22-I24 to 5-7 to give Multi-step frequency command.
- Multi-step frequency 0 is settable in **Frq** – [Frequency mode] and **0.00** – [Frequency command].
- Multi-step frequency 1-3 are set at St1-St3 in Drive group, while Step frequency 4-7 are set at I30-I33 in I/O group.

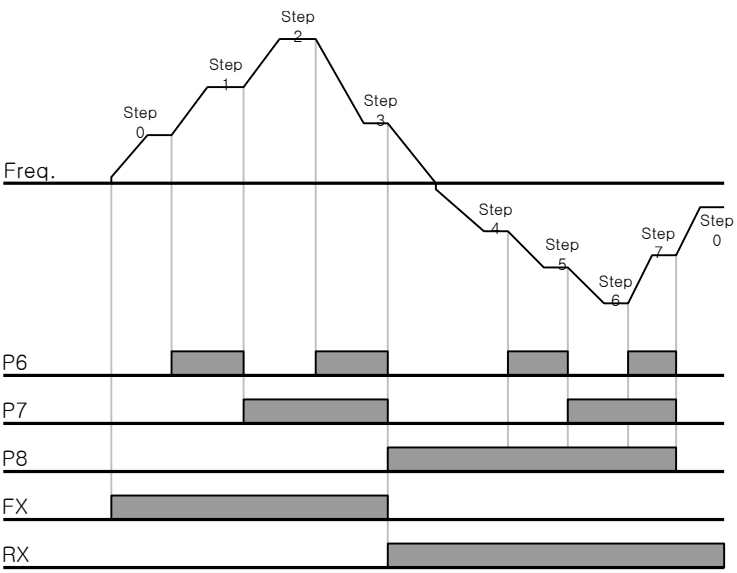

Step freq.	FX or RX	P8	P7	P6
0	✓	-	-	-
1	✓	-	-	✓
2	✓	-	✓	-
3	✓	-	✓	✓
4	✓	✓	-	-
5	✓	✓	-	✓
6	✓	✓	✓	-
7	✓	✓	✓	✓

9.3 Operating command setting method

- Operation via keypad RUN key and STOP/RST key (Modality 0)

Group	Code	Parameter Name	Setting	Range	Initial	Unit
Drive group	**drv**	**[Drive mode]**	**0**	0 ~ 3	1	
	drC	[Direction of motor rotation select]	-	F, r	F	

- Set **drv** – [Drive mode] to 0.
- Acceleration is started upon pressing the Run key if operating frequency is set. Motor decelerates to stop by pressing the STOP/RST key.
- Selecting rotation direction is available at **drC** - [Direction of motor rotation select] when operating command is issued via keypad.

drC	[Direction of motor rotation select]	F	Forward
		r	Reverse

▸ When remote keypad is connected, body-embedded keypad is deactivated.

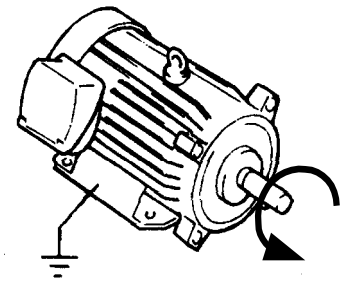

Forward : Counter-clockwise

- Operating command via FX, RX terminal (Modality 1)

Group	Code	Parameter Name	Setting	Range	Initial	Unit
Drive group	**drv**	**[Drive mode]**	**1**	0 ~ 3	1	
I/O group	I17	[Multi-function input terminal P1 define]	0	0 ~ 29	0	
	I18	[Multi-function input terminal P2 define]	1	0 ~ 29	1	

- Set **drv** – [Drive mode] to 1.
- Set I17 and I18 to 0 and 1 to use P1 and P2 as FX and RX terminals.
- “FX” is Forward run command and “RX” Reverse run.

▸ Motor is stopped when FX/RX terminal is ON/OFF at the same time.

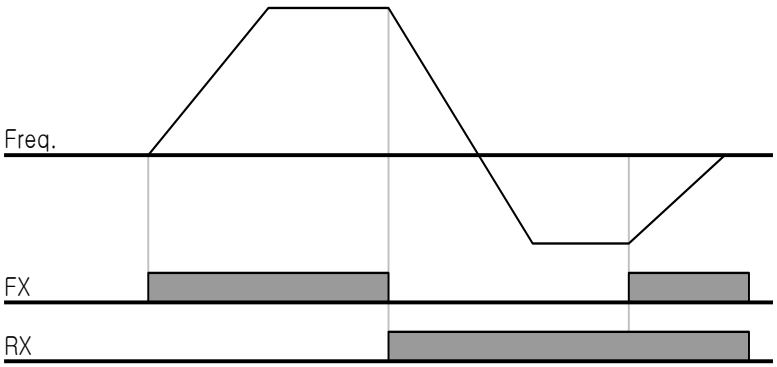

- Operating command via FX, RX terminal (Modality 2)

Group	Code	Parameter Name	Setting	Range	Initial	Unit
Drive group	**drv**	**[Drive mode]**	**2**	0 ~ 3	1	
I/O group	I17	[Multi-function input terminal P1 define]	0	0 ~ 29	0	
	I18	[Multi-function input terminal P2 define]	1	0 ~ 29	1	

- Set the **drv** to 2.
- Set I17 and I18 to 0 and 1 to use P1 and P2 as FX and RX terminals.
- FX: Operating command setting. Motor runs in forward direction when RX terminal (P2) is OFF.
- RX: Direction of motor rotation select. Motor runs in reverse direction when RX terminal (P2) is ON.

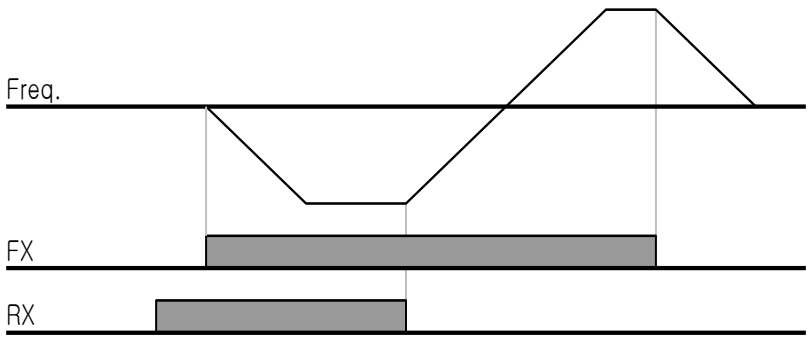

- Operating command via RS485 communication (Modality 3)

Group	Code	Parameter Name	Setting	Range	Initial	Unit
Drive group	**drv**	**[Drive mode]**	**3**	0 ~ 3	1	
I/O group	I59	[Communication protocol select]	-	0 ~ 1	0	
	I60	[Inverter number]	-	1 ~ 250	1	
	I61	[Baud rate]	-	0 ~ 4	3	

- Set the **drv** to 3.
- Set I59, I60 and I61correctly.
- Inverter operation is performed via RS485 communication.
- Refer to Chapter. 13, RS485 communication.

- Rotating direction selection via –10 ~ +10[V] input of V1 terminal

Group	Code	Parameter Name	Setting	Range	Initial	Unit
Drive group	**frq**	**[Frequency setting]**	**2**	0 ~ 7	0	
	drv	[Drive mode]	-	0 ~ 3	1	

- Set **frq** to 2.
- Inverter is operating as the table below regardless of Drive mode setting.

	FWD RUN Command	REV RUN Command
0 ~ +10 [V]	FWD RUN	REV RUN
–10 ~ 0 [V]	REV RUN	FWD RUN

- Motor runs in Forward direction when input voltage to V1-CM is 0~10[V] and FWD RUN command is active. When input voltage polarity is reversed to –10~0[V] during FWD RUN, motor decelerates to stop and runs in reverse direction.
- When input voltage to V1-CM is 0~10[V] and REV RUN command is active, motor runs in Reverse direction and if –10~0[V] is entered, the motor rotating direction is reverse.

- FX/RX Run Disable

Group	Code	Parameter Name	Setting	Range	Initial	Unit
Drive group	drC	[Direction of motor rotation select]	-	F, r	F	
Function group 1	**F1**	**[Forward/Reverse run disable]**	**-**	0 ~ 2	0	

- Select the direction of motor rotation.
- 0: Forward and Reverse run enable
- 1: Forward run disable
- 2: Reverse run disable

- Power On Start select

Group	Code	Parameter Name	Setting	Range	Initial	Unit
Drive group	**drv**	**[Drive mode]**	**1, 2**	0 ~ 3	1	
Function group 2	**H20**	**[Power On Start select]**	**1**	0 ~ 1	0	

- Set H20 to 1.
- When AC input power is applied to the inverter with drv set to 1 or 2 {Run via control terminal and one of them ON), motor starts acceleration.
- This parameter is inactive when **drv** is set to 0 {Run via keypad} or 3 {RS485 communication}.

⚠ CAUTION

Particular attention must be directed to this function due to potential hazard as motor starts to run suddenly upon applying AC input power.

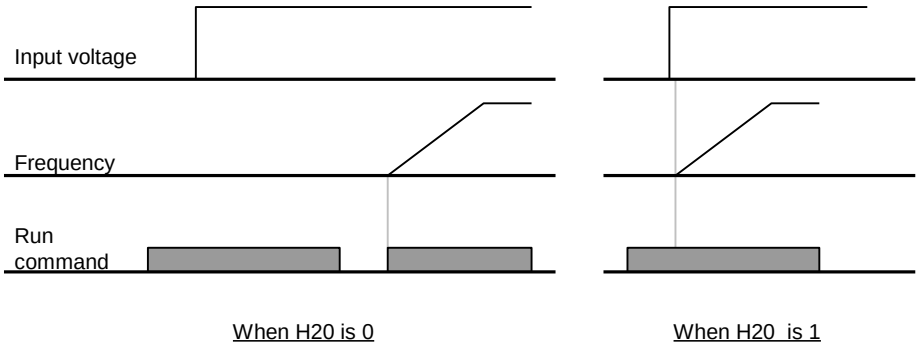

- Restart after fault reset

Group	Code	Parameter Name	Setting	Range	Initial	Unit
Drive group	**drv**	**[Drive mode]**	**1, 2**	0 ~ 3	1	
Function group 2	**H21**	**[Restart after fault reset selection]**	**1**	0 ~ 1	0	

- Set H21 to 1.
- Motor starts acceleration if **drv** is set to 1 or 2 and the selected terminal is ON when a fault is cleared.
- This parameter is inactive when **drv** is set to 0 {Run via keypad} or 3 {RS485 communication}.

⚠ CAUTION

Particular attention must be directed to this function due to potential hazard as motor starts to run suddenly after the fault is cleared.

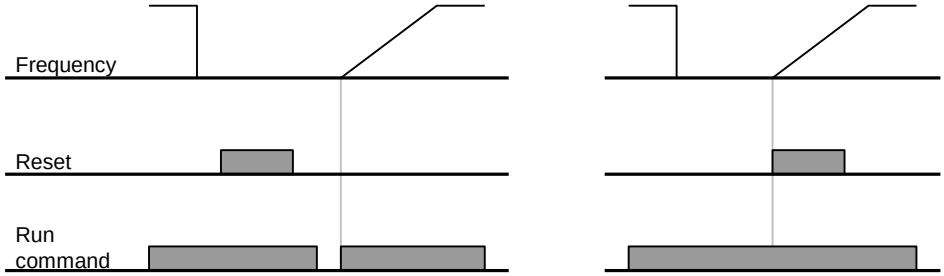

When H21 is 0 When H21 is 1

9.4 Accel/Decel time and pattern setting

- Accel/Decel time setting based on Max frequency

Group	Code	Parameter Name	Setting	Range	Initial	Unit
Drive group	**ACC**	**[Accel time]**	**-**	0 ~ 6000	5.0	Sec
	dEC	**[Decel time]**	**-**	0 ~ 6000	10.0	Sec
Function group1	F21	[Max Frequency]	-	40 ~ 400	50.00	Hz
Function group2	**H70**	**[Frequency Reference for Accel/Decel]**	**0**	0 ~ 1	0	
	H71	[Accel/Decel time scale]	-	0 ~ 2	1	

- Set the desired Accel/Decel time at ACC/dEC in Drive group.
- If H70 is set to 0 {Max frequency}, Accel/Decel time is the time that takes to reach the max freq from 0 Hz.
- Desired Accel/Decel time unit is settable at the H71.

▸ Accel/Decel time is set based on **F21** – [Max frequency]. For instance, if **F21** is set to 60Hz, Accel/Decel time 5 sec, and run frequency 30Hz, time to reach 30Hz would be 2.5 sec.

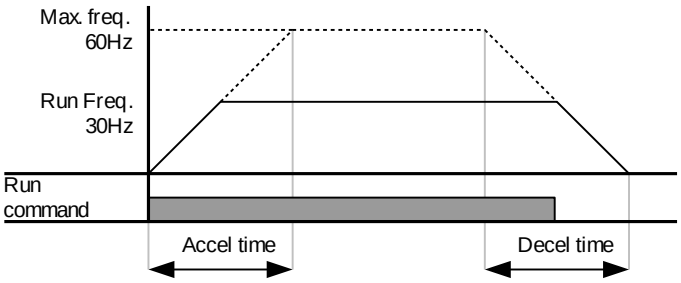

- More precise time unit can be set corresponding to load characteristics as shown below.
- In Sinus M, number display is available up to 5. Therefore, if time unit is set to 0.01 sec, Max Accel/Decel time would be 600.00 sec.

Code	Name	Set value	Setting range	Description
H71	[Accel/Decel time scale]	0	0.01~600.00	Setting Unit: 0.01 sec
		1	0.1~6000.0	Setting Unit: 0.1 sec
		2	1~60000	Setting Unit: 1 sec

- Accel/Decel time setting based on Operating Frequency

Group	Code	Parameter Name	Setting	Range	Initial	Unit
Drive group	ACC	[Accel time]	-	0 ~ 6000	5.0	Sec
	dEC	[Decel time]	-	0 ~ 6000	10.0	Sec
Function group 2	**H70**	**[Frequency Reference for Accel/Decel]**	**1**	0 ~ 1	0	

- Accel/Decel time is set at the **ACC/dEC**.
- If you set H70 to 1 {Delta frequency}, Accel/Decel time is the time that takes to reach a target freq from constant run freq (Current operating freq.).

- When H70 and Accel time are set to 1 {Delta frequency} and 5 sec, respectively,
- The below graph in Section A shows the change in operating frequency when target frequency is set to 10Hz at first and then changed to 30Hz.

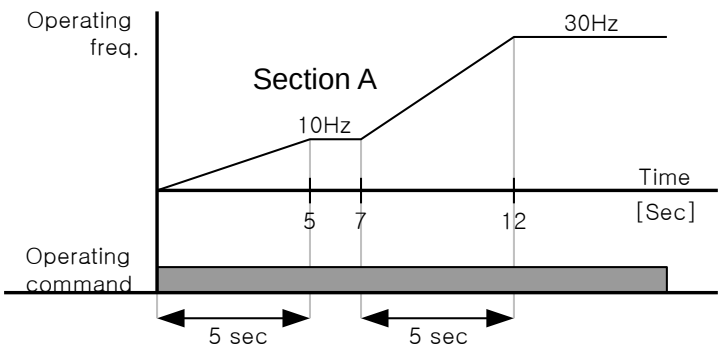

- Multi-Accel/Decel time setting via Multi-function terminals

Group	Code	Parameter Name	Set	Range	Initial	Unit
Drive group	ACC	[Accel time]	-	0 ~ 6000	5.0	Sec
	dEC	[Decel time]	-	0 ~ 6000	10.0	Sec
I/O group	I17	[Multi-function input terminal P1 define]	0	0 ~ 29	0	
	I18	[Multi-function input terminal P12 define]	1		1	
	I19	**[Multi-function input terminal P3 define]**	**8**		2	
	I20	**[Multi-function input terminal P4 define]**	**9**		3	
	I21	**[Multi-function input terminal P5 define]**	**10**		4	
	I34	[Multi-Accel time 1]	-	0 ~ 6000	3.0	Sec
	~	~				
	I47	[Multi-Decel time 7]	-		9.0	

- Set I19, I20, I21 to 8, 9, 10 if you want to set Multi - Accel/Decel time via P3-P5 terminals.
- Multi-Accel/Decel time 0 is settable at ACC and dEC.
- Multi-Accel/Decel time 1-7 is settable at I34-I47.

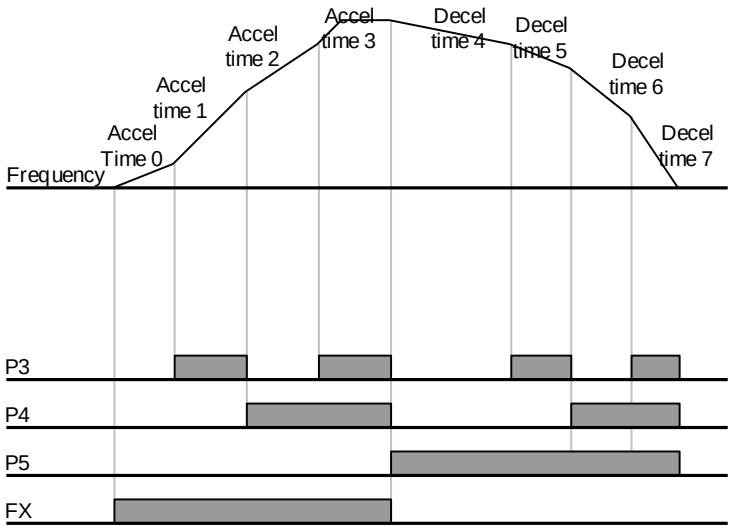

Accel/Decel time	P5	P4	P3
0	-	-	-
1	-	-	✓
2	-	✓	-
3	-	✓	✓
4	✓	-	-
5	✓	-	✓
6	✓	✓	-
7	✓	✓	✓

- Accel/Decel pattern setting

Group	Code	Parameter Name	Setting range		Initial	Unit
Function group 1	F2	[Accel pattern]	0	Linear	0	
	F3	[Decel pattern]	1	S-curve		
Function group 2	H17	[S-Curve Accel/Decel start side]	0~ 100		40	%
	H18	[S-Curve Accel/Decel end side]			40	%

- Accel/Decel pattern is settable at F2 and F3.
- Linear: This is a general pattern for constant torque applications.
- S-curve: This curve allows the motor to accelerate and decelerate smoothly.

CAUTION:
For S-curve, the actual Accel/Decel time takes longer than the time set by user.

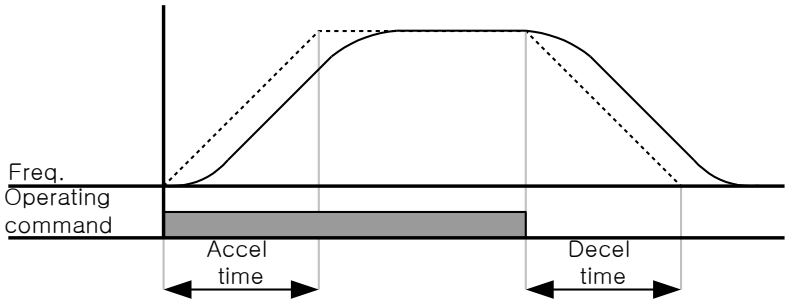

- H17 sets the starting ratio between S-curve and Linear in 1/2 of Accel/Decel Ref. Frequency. For smooth Accel/Decel starting, increase H17 to extend S-curve ratio.
- H18 sets the ending ratio between S-curve and Linear in 1/2 of Accel/Decel Ref. Frequency. For smooth and accurate speed arrival and stopping, increase H18 to extend S-curve ratio.

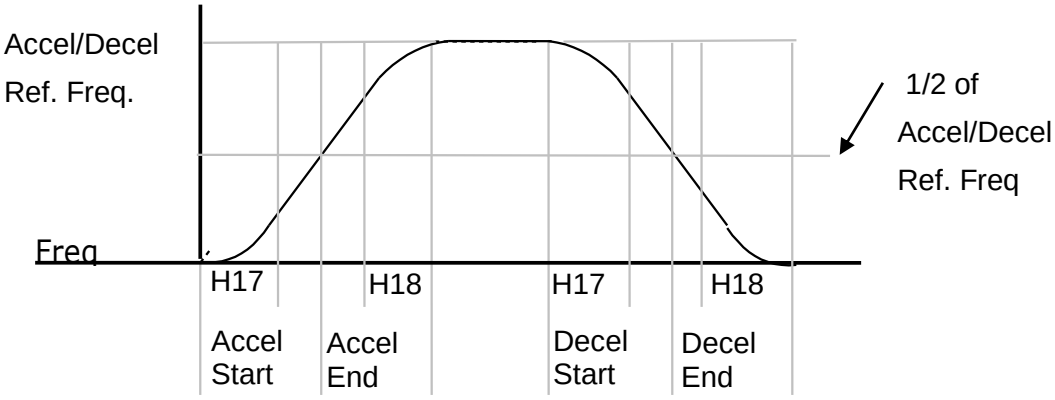

- Note that setting Frequency Ref. for Accel/decel (H70) is set to Max Freq and target freq is set below Max freq. the shape of S-curve may be distorted.

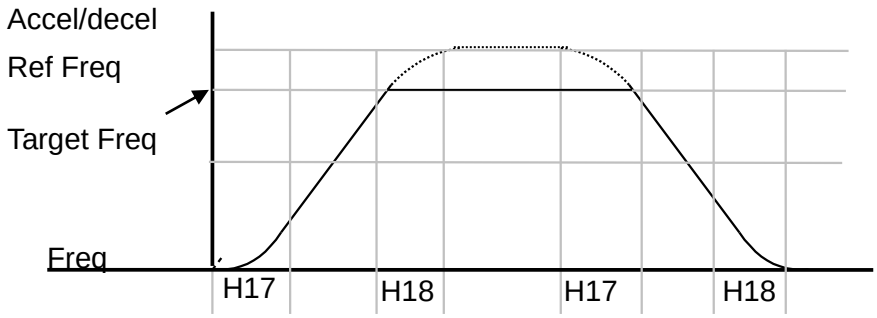

☞Note: If Target Frequency is below Max Frequency, the waveform will be shown with the top portion cut out.

- Accel time for S-curve setting

$$= ACC + ACC \times \frac{H17}{2} + ACC \times \frac{H18}{2}$$

- Decel time for S-curve setting

$$= dEC + dEC \times \frac{H17}{2} + dEC \times \frac{H18}{2}$$

- ACC, dEC indicate the set time in Drive group.

- Accel/Decel Disable

Group	Code	Parameter Name	Setting	Range	Initial	Unit
I/O group	I17	[Multi-function input terminal P1 define]	-	0 ~29	0	
	~	~				
	I24	**[Multi-function input terminal P8 define]**	**24**		7	

- Select one terminal among Multi-function input terminals 1-8 to define Accel/Decel disable.
- If P8 is selected, set I24 to 24 to activate this function.

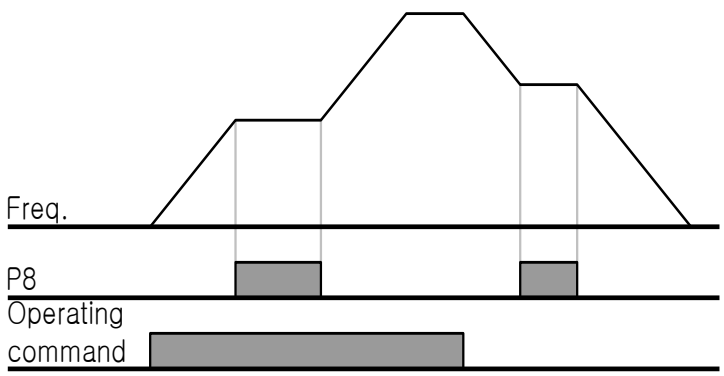

9.5 V/F control

- Linear V/F pattern operation

Group	Code	Parameter Name	Setting	Range	Initial	Unit
Function group 1	F22	[Base frequency]	-	30 ~ 400	50.00	Hz
	F23	[Start frequency]	-	0.1 ~ 10.0	0.50	Hz
	F30	**[V/F pattern]**	**0**	0 ~ 2	0	
Function group 2	H40	[Control mode select]	-	0 ~ 3	0	

- Set F30 to 0 {Linear}.
- This pattern maintains a linear Volts/frequency ratio from F23 - [Start frequency] to F22-[Base frequency]. This is appropriate for constant torque applications.

- Base Frequency: Inverter outputs its rated voltage at this level. Enter the motor nameplate frequency.
- Start Frequency: Inverter starts to output its voltage at this level.

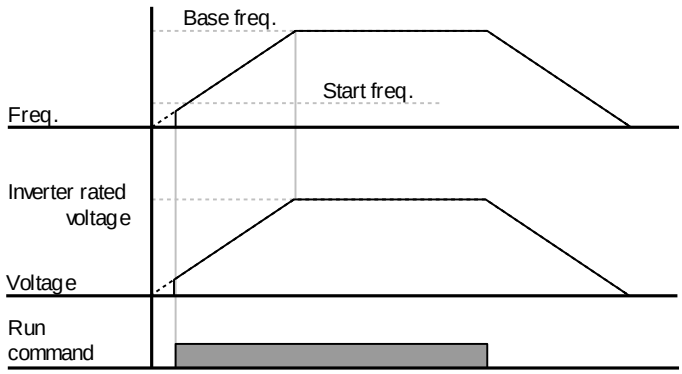

- Square V/F pattern

Group	Code	Parameter Name	Setting	Range	Initial	Unit
Function group 1	**F30**	**[V/F pattern]**	**1**	0 ~ 2	0	

- Set F30 to 1{Square}.
- This pattern maintains squared volts/hertz ratio. Appropriate applications are fans, pumps, etc.

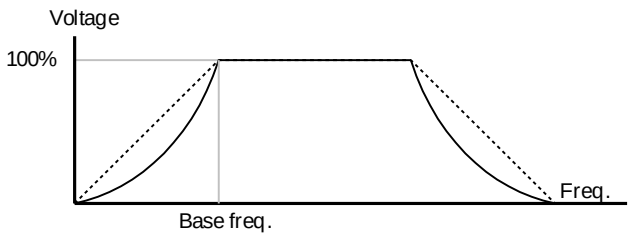

- User V/F pattern operation

Group	Code	Parameter Name	Setting	Range	Initial	Unit
Function group 1	**F30**	**[V/F pattern]**	**2**	0 ~ 2	0	
	F31	[User V/F frequency 1]	-	0 ~ 400	12.50	Hz
	~	~				
	F38	[User V/F voltage 4]	-	0 ~ 100	100	%

- Select F30 to 2 {User V/F}.
- User can adjust the Volt/Frequency ratio according to V/F pattern of special motors and load characteristics.

⚠ CAUTION

In case of using a standard induction motor, setting V/F values much higher than linear V/F pattern, it could result a torque shortage or motor overheating due to windings over-energizing.
When User V/F pattern is active, F28 - [Torque Boost in forward direction] and F29 - [Torque Boost in reverse direction] are deactivated.

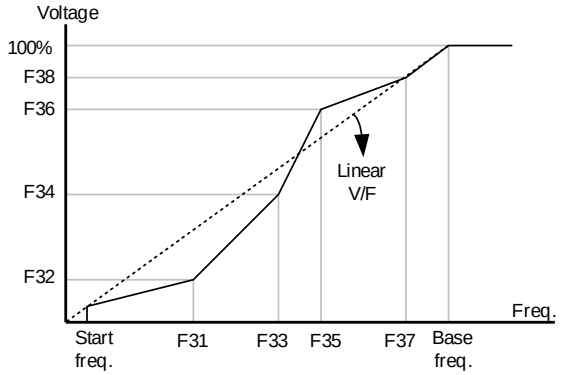

- Output voltage adjustment

Group	Code	Parameter Name	Setting	Range	Initial	Unit
Function group 1	**F39**	**[Output voltage adjustment]**	**-**	40 ~ 110	100	%

- This function is used to adjust the output voltage of the inverter. This is useful when you use a motor that has a rated voltage lower than the input voltage.

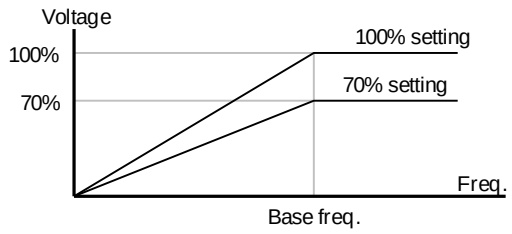

- Manual torque boost

Group	Code	Parameter Name	Setting	Range	Initial	Unit
Function group 1	**F27**	**[Torque Boost select]**	**0**	0 ~ 1	0	
	F28	[Torque boost in forward direction]	-	0 ~ 15	2	%
	F29	[Torque boost in reverse direction]				

- Set F27 to 0 {Manual torque boost}.
- The values of [Torque boost in forward/reverse direction] are set separately in F28 and F29.

⚠ CAUTION

- If the boost value is set much higher than required, it may cause motor overheating or inverter trips, due to over-energizing.

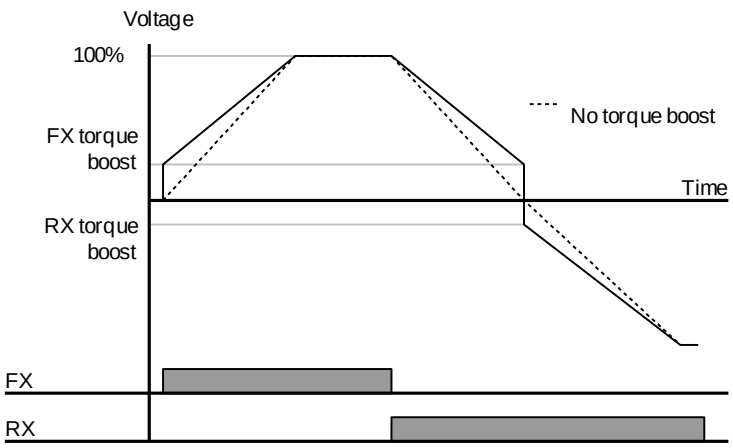

- Auto torque boost

Group	Code	Parameter Name	Setting	Range	Initial	Unit
Function group 1	**F27**	**[Torque Boost select]**	**1**	0 ~ 1	0	
Function group 2	H34	[No load motor Current]	-	0.1 ~ 20	-	A
	H41	[Auto tuning]	0	0 ~ 1	0	
	H42	[Stator resistance (Rs)]	-	0 ~ 14	-	Ω

- Before set Auto Torque Boost, H34 and H42 should be set correctly.
- Select 1{Auto torque boost} in F27.
- Inverter automatically calculates torque boost value using motor parameters and outputs the corresponding voltage.

9.6 Stop method select

- Decel to stop

Group	Code	Parameter Name	Setting	Range	Initial	Unit
Function group 1	**F4**	**[Stop mode select]**	**0**	0 ~ 3	0	

- Select 0 {Decel to stop} in F4 code.
- Motor decelerates to 0 Hz and stops during the time set.

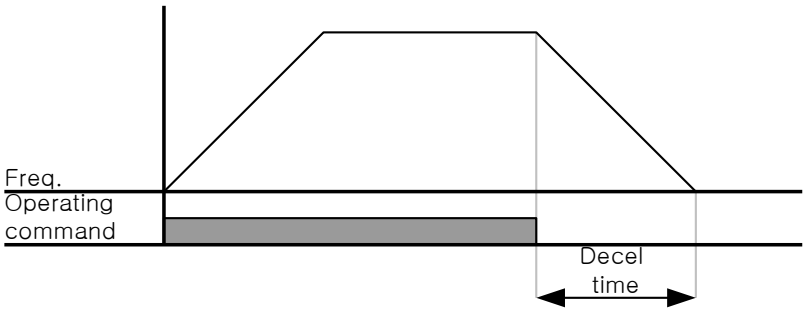

- DC braking to stop

Group	Code	Parameter Name	Setting	Range	Initial	Unit
Function group 1	**F4**	**[Stop mode select]**	**1**	0 ~ 3	0	

- Select 1 {DC brake to stop} in F4 code.
- Refer to page 99.

- Coast to stop

Group	Code	Parameter Name	Setting	Range	Initial	Unit
Function group 1	**F4**	**[Stop mode select]**	**2**	0 ~ 3	0	

- Select 2 { Coast to stop } in F4 code.
- When RUN command is OFF, Output Frequency and voltage are shut down.

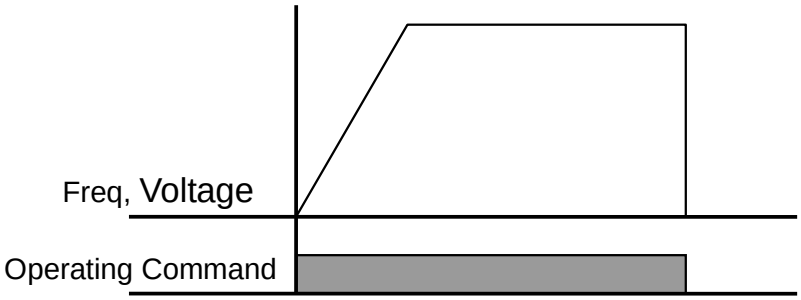

9.7 Frequency limit

- Frequency limit using Max Frequency and Start Frequency

Group	Code	Parameter Name	Setting	Range	Initial	Unit
Function group 1	**F21**	**[Max frequency]**	-	0 ~ 400	50.00	Hz
	F23	**[Start frequency]**	-	0.1 ~ 10	0.50	Hz

- Max Frequency: Frequency highest limit. Any frequency cannot be set above [Max frequency] except for F22 [Base frequency].
- Start Frequency: Frequency lowest limit. Until a frequency reference is set lower than this, 0.00 output frequency is automatically set.

- Frequency command limit using High/Low limit

Group	Code	Parameter Name	Setting	Range	Initial	Unit
Function group 1	**F24**	**[Frequency high/low limit select]**	**1**	0 ~ 1	0	
	F25	[Frequency high limit]	-	0 ~ 400	50.00	Hz
	F26	[Frequency low limit]	-	0 ~ 400	0.50	Hz

- Set F24 to 1.
- Active run frequency can be set within the range of F25 and F26.

▸ When frequency setting is done via Analog input (voltage or current input), the inverter operates within the range of high and low limit frequency as shown below.

▸ This setting is also valid when frequency setting is done via keypad.

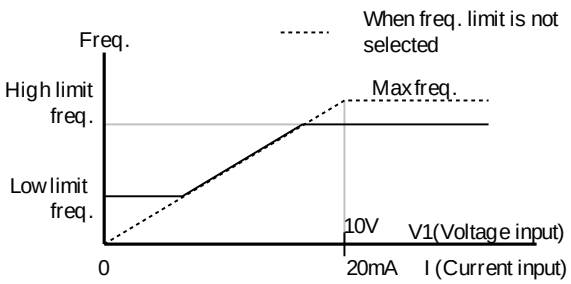

- Skip frequency

Group	Code	Parameter Name	Setting	Range	Initial	Unit
Function group 2	**H10**	**[Skip frequency select]**	**1**	0 ~ 1	0	
	H11	[Skip frequency low limit 1]	-	0.1 ~ 400	10.00	Hz
	~	~				
	H16	[Skip frequency low limit 3]	-	0.1 ~ 400	35.00	Hz

- Set H10 to 1.
- Run frequency setting is not available within the skip frequency range of H11-H16.
- Skip frequency is settable within the range of F21 – [Max frequency] and F23 – [Start frequency].

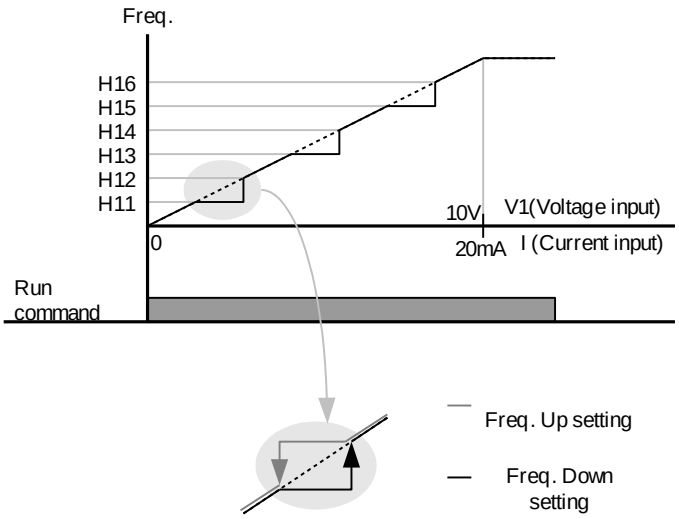

- When it is desired to avoid resonance, attributable to the natural frequency of a mechanical system, these parameters allow resonant frequencies to be skipped. Three different areas of Skip frequency can be set with the skip frequencies set to either the top or bottom point of each area. However, during acceleration or deceleration, the run frequency within the set area is valid.
- In case of increasing frequency setting as shown above, if frequency set value (Analog setting via voltage, current, RS485 communication or digital setting via keypad) is within the range of Skip frequency, it maintains skip frequency low limit value. If the set value is outside the range, it increases the frequency following the set acceleration ramp.
- In case of decreasing frequency setting, if frequency set value (Analog setting via voltage, current, RS485 communication, or digital setting via keypad) is within the range of Skip frequency, it maintains Skip frequency high limit value. If the set value is outside the range, it decreases the frequency following the set deceleration ramp.

CHAPTER 10 - ADVANCED FUNCTIONS

10.1 DC brake

- DC brake at stop

Group	Display	Parameter Name	Setting	Range	Default	Unit
Function group 1	**F4**	**[Stop mode select]**	**1**	0 ~ 2	0	
	F8	[DC Brake start frequency]	-	0.1 ~ 60	5.00	Hz
	F9	[DC Brake wait time]	-	0 ~ 60	0.1	sec
	F10	[DC Brake current]	-	0 ~ 200	50	%
	F11	[DC Brake time]	-	0 ~ 60	1.0	sec

- Set F4 - [Stop mode select] to 1.
- F8: The frequency at which the DC brake will become active.
- F9: Inverter output will wait for this time set in F8 - [DC Brake start frequency] before applying F10 - [DC Brake current].
- F10: Set this value as a percent of H33 – [Motor rated current].
- F11: It sets the time for F10 - [DC Brake current] to be applied to the motor.

> ⚠ **Caution:**
> If excessive DC Brake current is set or DC Brake time is set too long, this may cause motor overheating and the motor may be damaged.

- Setting F10 or F11 to 0 will disable DC brake.
- F9 – [DC Brake Wait time]: When load inertia is large or F8 – [DC Brake Start Frequency] is too high, over current trip may occur. It can be prevented increasing the value of F9.

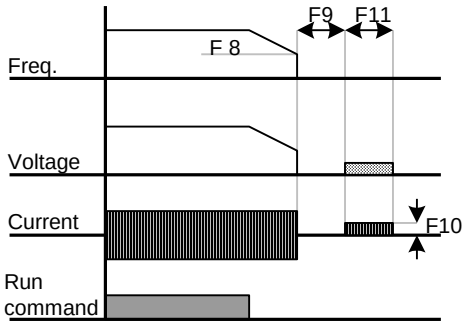

- In case of DC brake at high load inertia and frequency, change the DC brake controller gain according to H37 set value.

H37	Load inertia ratio	0	Less than 10 times motor inertia
		1	10 times motor inertia
		2	Greater than 10 times motor inertia

- DC brake at start

Group	Display	Parameter Name	Setting	Range	Default	Unit
Function group 1	**F12**	**[DC Brake start current]**	**-**	0 ~ 200	50	%
	F13	**[DC Brake start time]**	**-**	0 ~ 60	0	sec

- F12: It sets the level as a percent of H33 – [Motor rated current].
- F13: Motor accelerates after DC current, set in F12, is applied for this time.

> ⚠ **Caution:**
> If excessive DC Brake voltage is set or DC Brake time is set too long, it may cause motor overheating and damage the motor.

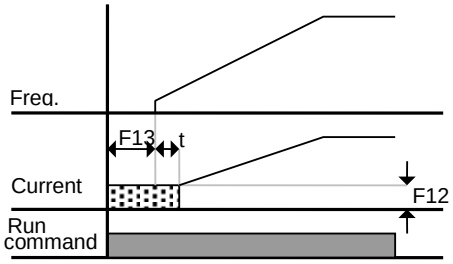

- Setting F12 or F13 to 0 will disable Starting DC brake.
- t: = when DC brake at start is applied, the output frequency increases after t time, or rather when the inverter output voltage reaches the residual voltage due to DC brake

- DC brake hold

Group	Display	Parameter Name	Setting	Range	Default	Unit
Function group 1	**F12**	**[DC Brake start current]**	**-**	0 ~ 200	50	%
I/O group	**I19**	**[Multi-function Input terminal P3 Function select]**	**11**	0 ~ 29	2	

- F12: It sets the level as a percent of H33 – [Motor rated current].
- Select a terminal to issue a command of DC brake at a stop among P1 to P8.
- If P3 terminal is set for this function, set I19 to 11 {DC brake hold}.

> ⚠ **Caution:**
> If excessive DC Brake current is set or DC Brake hold time is set too long, it may cause motor overheating and damage the motor.

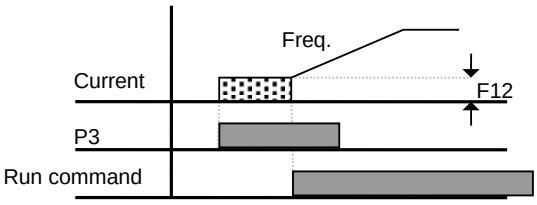

10.2 Jog operation

Group	Display	Parameter Name	Setting	Range	Default	Unit
Function group 1	**F20**	**[Jog frequency]**	**-**	0 ~ 400	10.00	Hz
I/O group	**I21**	**[Multi-function input terminal P5 define]**	**4**	0 ~ 29	4	

- Set the desired jog frequency in F20.
- Select a terminal from P1 - P8 to use for this setting.
- If P5 is set for Jog operation, set I21 to 4 {Jog}.
- Jog frequency can be set within the range of F21 - [Max frequency] and F23 – [Start frequency].

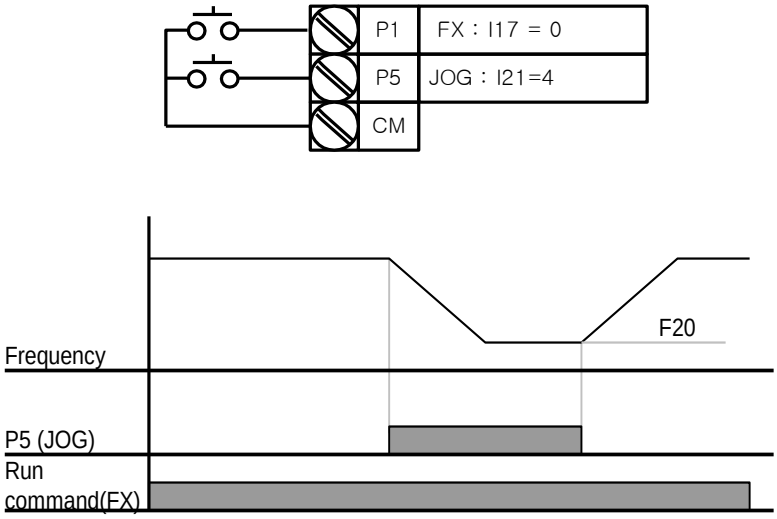

- Jog operation overrides all other operations except Dwell operation. Therefore, if Jog frequency command is entered in the middle of Multi-Step, Up-Down or 3-wire operation, operation is executed at Jog frequency.
- The above diagram is an example of when Multi-function input is set to NPN mode.
- Terminal jog operation.

- Terminal JOG FX/RX operation

Group	Display	Parameter Name	Setting	Range	Default	Unit
Function group 1	**F20**	**[Jog frequency]**	**-**	0 ~ 400	10.00	Hz
I/O group	**I23**	**[Multi-function input terminal P7 define]**	**26**	0 ~ 29	6	
	I24	**[Multi-function input terminal P8 define]**	**27**	0 ~ 29	7	

- Set the desired jog frequency in F20.
- Select multifunction input terminal P7 or P8 for this setting.
- If P7 is set for Jog operation, set I23 to 26 {Jog}.

- Jog frequency's setting range can be set between Max. frequency (F21) and start frequency (F23).
- The following diagram is an example of when the reference frequency is 30Hz and the Jog frequency is 10 Hz.

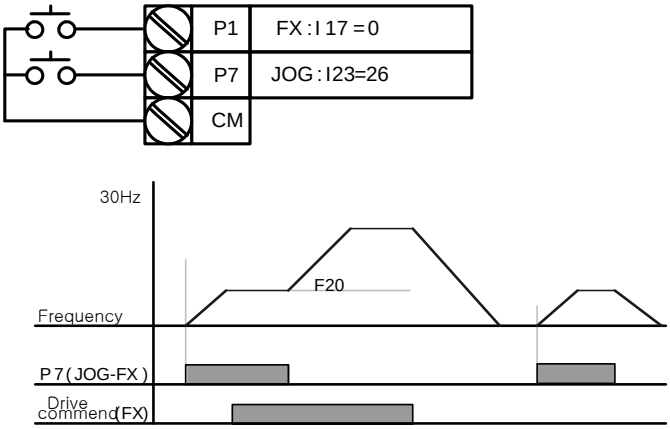

10.3 UP-DOWN

- Up-down storage function

Group	Display	Parameter Name	Setting	Range	Default	Unit
Drive group	**Frq**	**[Frequency setting method]**	**8**	0~8	0	
I/O group	**I17**	**[Multi-function input terminal P1 define]**	**0**	0 ~ 29	0	
	I22	**[Multi-function input terminal P6 define]**	**25**		5	
	I23	**[Multi-function input terminal P7 define]**	**15**		6	
	I24	**[Multi-function input terminal P8 define]**	**16**		7	
Function group 1	**F63**	**[Up-down frequency Save select]**	**-**	0~1	0	
	F64	**[Up-down frequency storage]**	**-**		0.00	

- Select 8 in Frq code of drive group
- Select the terminal which is used as a up-down drive among multi-function inputs (P1~P8)
- If you select P7 and P8 as an up-down drive terminal, select each 15 (frequency increase command) and 16 (frequency decrease command) in the I23 and I24 of I/O group.
- If you select P6 terminal as an up-down save initial terminal, select 25 (up-down save initialization) as above.
- Up/down Save function: If F63, 'Save up/down frequency', is set to 1, the frequency before the inverter was stopped or decelerated is saved in F64.

▸ While up-down save operates, the user can initialize the saved up-down frequency by setting multi-function input terminal as a up-down frequency save initialization.

▸

F63	Save up/down frequency select	0	Remove 'save up/down frequency'
		1	Set 'save up/down frequency'
F64	Save up/down frequency	Up/down frequency saved	

▸

▸ If 'Up/Down Save Frequency Initialization' signal is sent while the multi-function input 'Up' or 'Down' function is applied, this signal is ignored.

- Up-down mode select

Group	Display	Parameter Name	Setting	Range	Default	Unit
Drive group	**Frq**	**[Frequency setting method]**	**8**	0~8	0	
I/O group	**I17**	**[Multi-function input terminal P1 define]**	**0**	0 ~ 29	0	
	I23	**[Multi-function input terminal P7 define]**	**15**		6	
	I24	**[Multi-function input terminal P8 define]**	**16**		7	
Function group 1	**F65**	**[Up-down mode select]**	**-**	0~2	0	
	F66	**[Up-down step frequency]**	**-**	0~400	0.00	Hz

- Select 8 in Frq code of drive group
- Select the terminal which is used as up-down drive among multi-function inputs (P1~P8)
- Operates in selected mode as a step frequency set in F66.

▸ The up-down mode is selected as follows:

F65	Up/down select	0	The reference frequency is increased according to Max./Min. frequency (Initial value)
		1	Increased as much as step frequency (F66) according to edge input
		2	Combination of 0 and 1
F66	Step frequency	Frequency increased according to edge input	

▸ When F65 is 0: If you press UP, it is increased up to Max. frequency as a speed value set in the above. (If a frequency limit exists, speed is increased up to upper limit.) If you press DOWN, it is decreased as the speed value set in the above regardless of the stop method. (If a frequency limit exists, speed is decreased up to lower limit.)

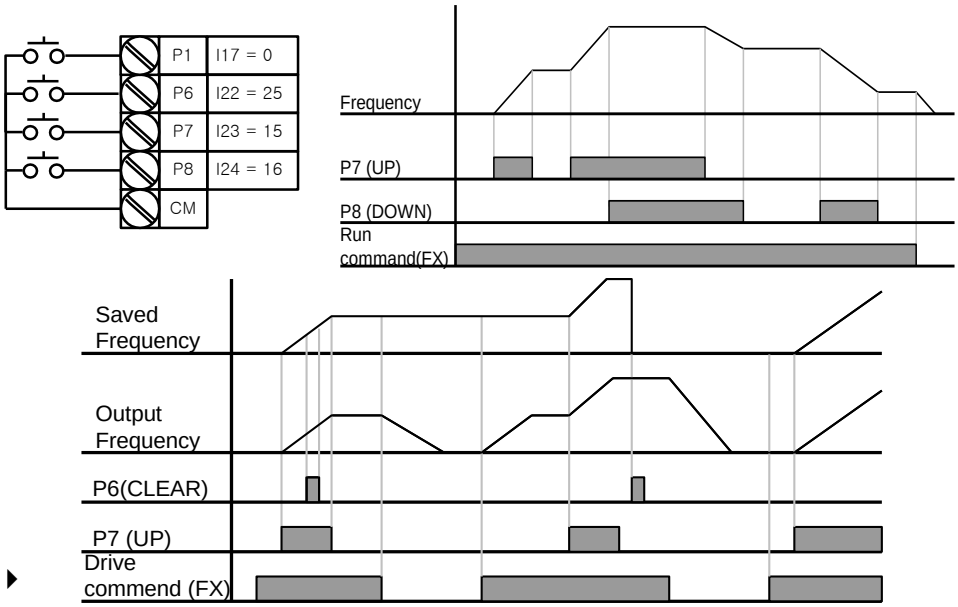

- When F65 is 1: It is increased as much as the step frequency set as F66 at the rising edge of multi-function input set as UP and when up-down is defined, it saves frequency at the falling edge. It is decreased as much as the step frequency set as F66 at the falling edge of rising edge of multi-function input set as DOWN and when up-down is defined, it saves frequency as the falling edge. In this case, while multi-function input set as UP or DOWN is defined, if a stop command is given, the previous falling edge value is saved and if multi-function input is not defined, the present frequency is not saved. The accel/decel time is the same as when set as “0”.

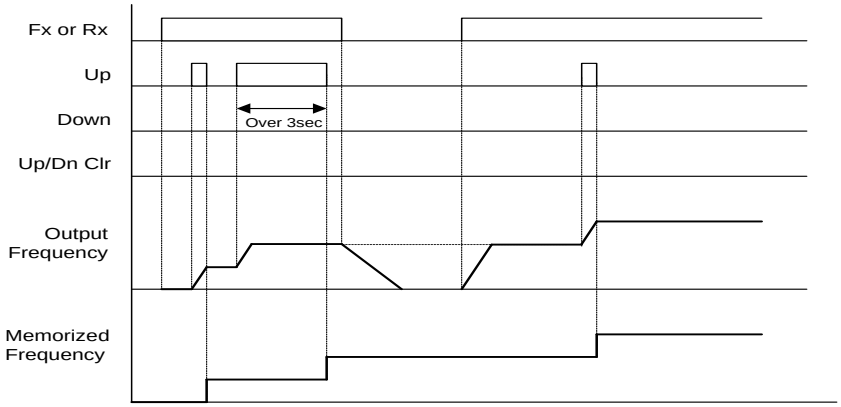

- When F65 is 2: It is increased as much as step frequency set as F66 at the rising edge of multi-function input set as UP and if it is activated for 3 seconds, it operates as it was set as “0”. It is decreased as much as the step frequency set as F66 at the rising edge of multi-function input set as DOWN. If it is activated for 3 seconds, it operates as it was set as “0” and the accel/decel time is the same as when set as “0”.

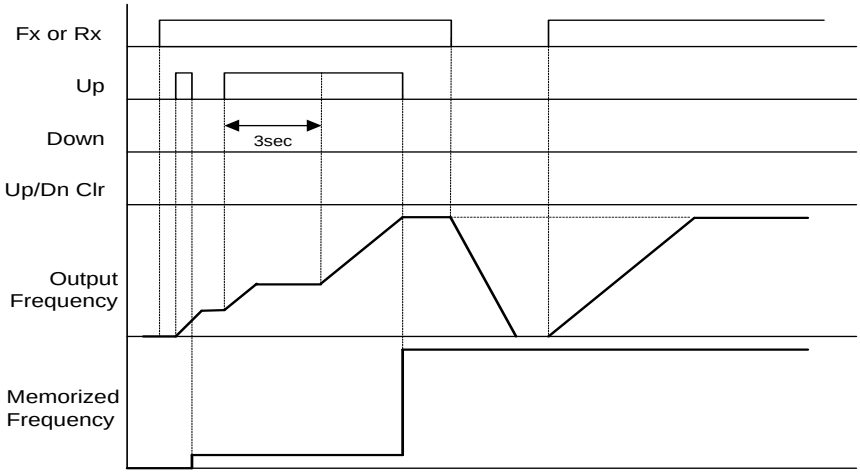

⚠ CAUTION
Because of UP or DOWN, when the input is entered again before it is increased as much as 1 step frequency, the input is ignored and the saved frequency is also the frequency of the inactive moment.

10.4 3-Wire operation (Start – Stop via push buttons)

Group	Display	Parameter Name	Setting	Range	Default	Unit
I/O group	I17	[Multi-function Input terminal P1 select]	0	0 ~ 29	0	
	~	~				
	I24	**[Multi-function Input terminal P8 select]**	**17**		7	

- Select a terminal from P1-P8 for use as 3-Wire operation.
- If P8 is selected as stop, set I24 to 17 {3-Wire operation}.

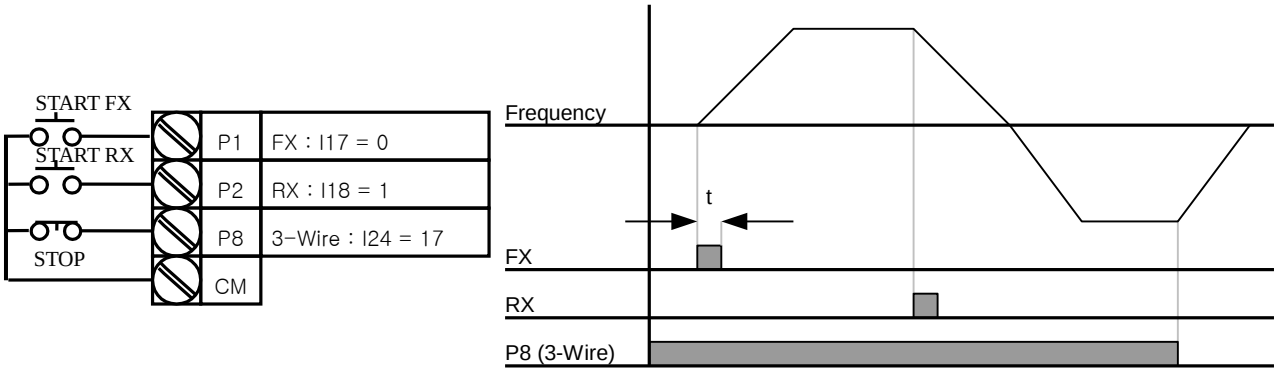

- Input signal is latched (saved) in 3-Wire operation.
- Inverter operates by Push-buttons supplying the motor when Start push button is ON. The inverter stops the motor when the Stop push button is OFF
- The bandwidth of pulse (t) should not be less than 50msec.

10.5 Dwell operation

Group	Display	Parameter Name	Setting	Range	Default	Unit
Function group 2	H7	[Dwell frequency]	-	0.1 ~ 400	5.00	Hz
	H8	[Dwell time]	-	0 ~ 10	0.0	sec

- In this setting, motor begins to accelerate after dwell operation is executed for dwell time at the dwell frequency.
- It is mainly used to release mechanical brakes in elevators and cranes.

- Dwell frequency: This function is used to generate an output torque in an intended direction. It is useful in hoisting applications to get enough torque before releasing a mechanical brake.
- Dwell frequency shall be set greater than Rated Slip frequency of the motor. Rated slip frequency is calculated by the formula shown below.

$$f_s = f_r - \left(\frac{rpm \times P}{120}\right)$$

Where, f_s = Rated slip frequency

f_r = Rated frequency

rpm = Motor nameplate RPM

P = Number of Motor poles

<u>Example</u>

Rated frequency = 60Hz

Rated RPM = 1740rpm

Number of motor poles= 4

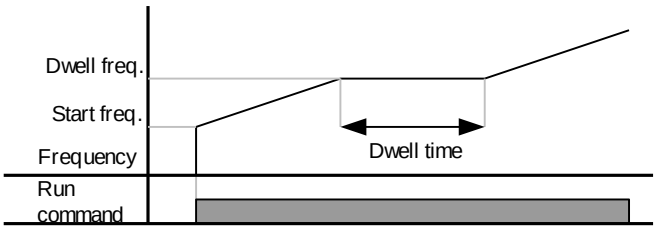

$$f_s = 60 - \left(\frac{1740 \times 4}{120}\right) = 2Hz$$

10.6 Slip compensation

Group	Display	Parameter Name	Setting	Range	Default	Unit
Function group 2	H30	[Motor type select]	-	0.2 ~ 7.5	7.5	
	H31	[Number of motor poles]	-	2 ~ 12	4	
	H32	[Rated slip frequency]	-	0 ~ 10	2.33	Hz
	H33	[Motor rated current]	-	0.5 ~ 50	26.3	A
	H34	[Motor No Load Current]	-	0.1 ~ 20	11.0	A
	H36	[Motor efficiency]	-	50 ~ 100	87	%
	H37	[Load inertia rate]	-	0 ~ 2	0	
	H40	**[Control mode select]**	**1**	0 ~ 3	0	

- Set H40 – [Control mode select] to 1 {Slip compensation}.
- This function allows the motor to run in constant speed by compensating slip in an induction motor.

- H30: Set the motor type connected to the inverter output side.

H30	[Motor type select]	0.2	0.2kW
		~	
		5.5	5.5kW
		7.5	7.5kW

- H31: Enter the pole number as shown on the Motor nameplate.
- H32: Enter the slip frequency in accordance with the following formula and motor nameplate.

$$f_s = f_r - \left(\frac{rpm \times P}{120}\right)$$

Where, f_s = Rated slip frequency

f_r = Rated frequency

rpm = Motor rated RPM

P = Motor pole number

Ex) Rated freq.: 60Hz, Rated RPM: 1740rpm, Poles: 4,

$$f_s = 60 - \left(\frac{1740 \times 4}{120}\right) = 2Hz$$

- H33: Enter the motor nameplate rated current.
- H34: Enter the measured current when the motor is running at rated frequency without load. Enter 50% of the rated motor current when it is difficult to measure the motor no load current.
- H36: Enter motor efficiency as shown on the nameplate.
- H37: Select load inertia related to the motor inertia as shown below.

H37	[Load inertia rate]	0	Less than 10 times motor inertia
		1	About 10 times motor inertia
		2	Greater than 10 times motor inertia

- As the loads are heavier, the speed gap between rated RPM and synchronous speed is greater (see the figure below). This function compensates the speed gap due to the slip.

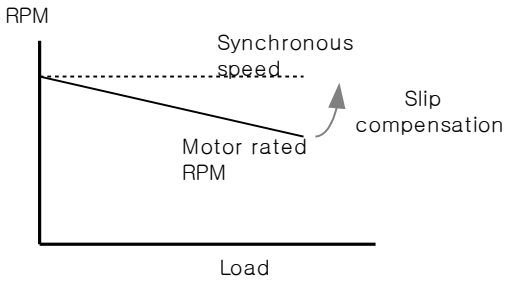

10.7 PID control

Group	Display	Parameter Name	Setting	Range	Default	Unit
Function group 2	**H49**	**[PID Operation select]**	**1**	0 ~ 1	0	-
	H50	[PID Feedback select]	-	0 ~ 1	0	-
	H51	[Proportional gain for PID control]	-	0 ~ 999.9	300.0	%
	H52	[Integral time for PID control]	-	0.1~ 32.0	1.0	sec
	H53	[Derivative time for PID control]	-	0.0~30.0	0	sec
	H54	[PID control mode select]	-	0 ~ 1	0	-
	H55	[PID output frequency high limit]	-	0.1 ~ 400	60.0	Hz
	H56	[PID output frequency low limit]	-	0.1 ~ 400	0.50	Hz
	H57	[PID reference source select]	-	0~4	0	Hz
	H59	[Inverse PID]	-	0~1	0	-
	H61	[Sleep delay time]	-	0.0~2000.0	60.0	-
	H62	[Sleep frequency]	-	0.00~400	0.00	Hz
	H63	[Wake-up level]	-	0.0~100.0	35.0	%
I/O group	I17~ I24	[Multi-function input terminal P1-P8 define]	21	0 ~ 29	-	-
Drive group	rEF	[PID reference]	-	0~400 /0~100	0.00 /0.0	Hz /%
	Fbk	[PID feedback]	-	0~400 /0~100	0.00 /0.0	Hz /%

- In order to control the amount of following water, pressure and temperature, do PID control to inverter output frequency.
- Select H49 of function group 2 as a 1 (PID drive select). Then REF and FBK category show. Set PID reference value in REF and real PID feedback amount is monitored at the FBK
- PID drive is classified as Normal PID mode and Process PID mode. It can be set in H54 (PID mode select)

- H50: Select the feedback type of PID controller.

H50	[PID Feedback select]	0	Terminal I input (0 ~ 20[mA])
		1	Terminal V1 input (0 ~ 10[V])

- H51: proportional term (P), multiplying the difference between the reference (value to be obtained from the physical quantity to adjust) and the feedback (value measured by the physical quantity). That difference is called “error” and is multiplied by a constant (H51), “Prop. Gain”). When H51 increases, the incidence of the proportional term in the regulator output signal also increases (regulator becomes more “sensitive”) if the error is the same. Instability occurs if H51 value is set too high.
- H52: Integral time is important because allows to reduce to 0 the error at running operation in order to keep the same value for both reference and feedback. Integral gain set the needed time to correct the accumulated error. For example if H52 is set to 1 sec and the error

becomes 100%, a 100% correction will be issued in 1 sec. Decreasing H52 value, the correction will be quickly, but a too low value could create a system instability.

- H53: Derivative time is calculated by multiplying the difference between the feedback variable instant value and the feedback variable value Derivative function operates only on the error variation (i.e. if the error is constant this function does not operate) The error is detected by 0.01 sec in Sinus M. If differential time is set to 0.01 sec and the percentage variation of error per 1 sec is 100%, 1% per 10msec is output.
- I17 ~ I24: To exchange PID to normal operation, set one of P1-P8 terminal to 21 and turn ON.
- rPM: Calculates the feedback from H50 into Motor frequency and displays it.
- rEF: Indicates PID controller's command value.
- Fbk: Converts feedback amount set in H50 to motor frequency.

Normal PID block diagram (H54=0)

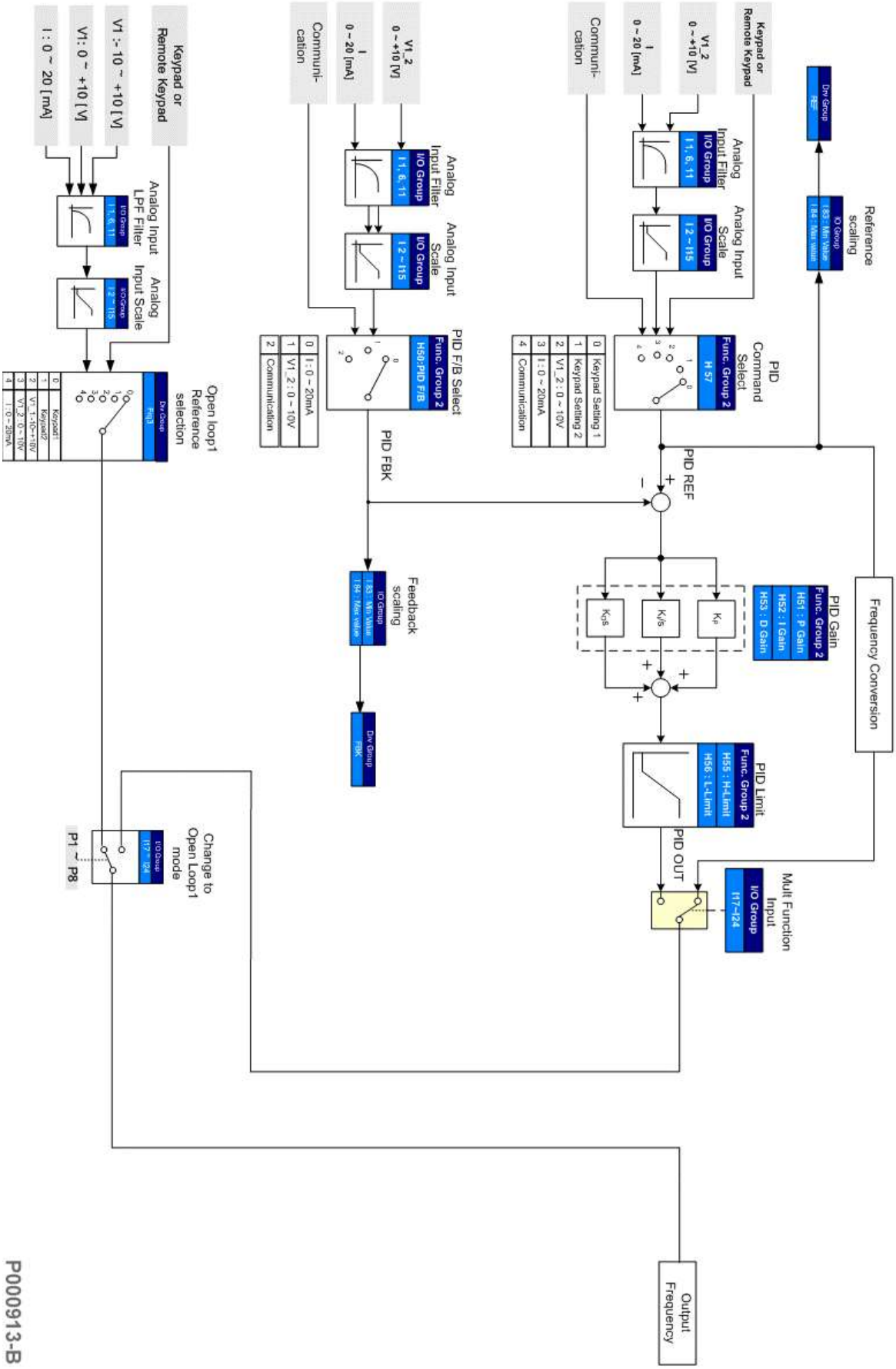

Process PID block diagram (H54=1)

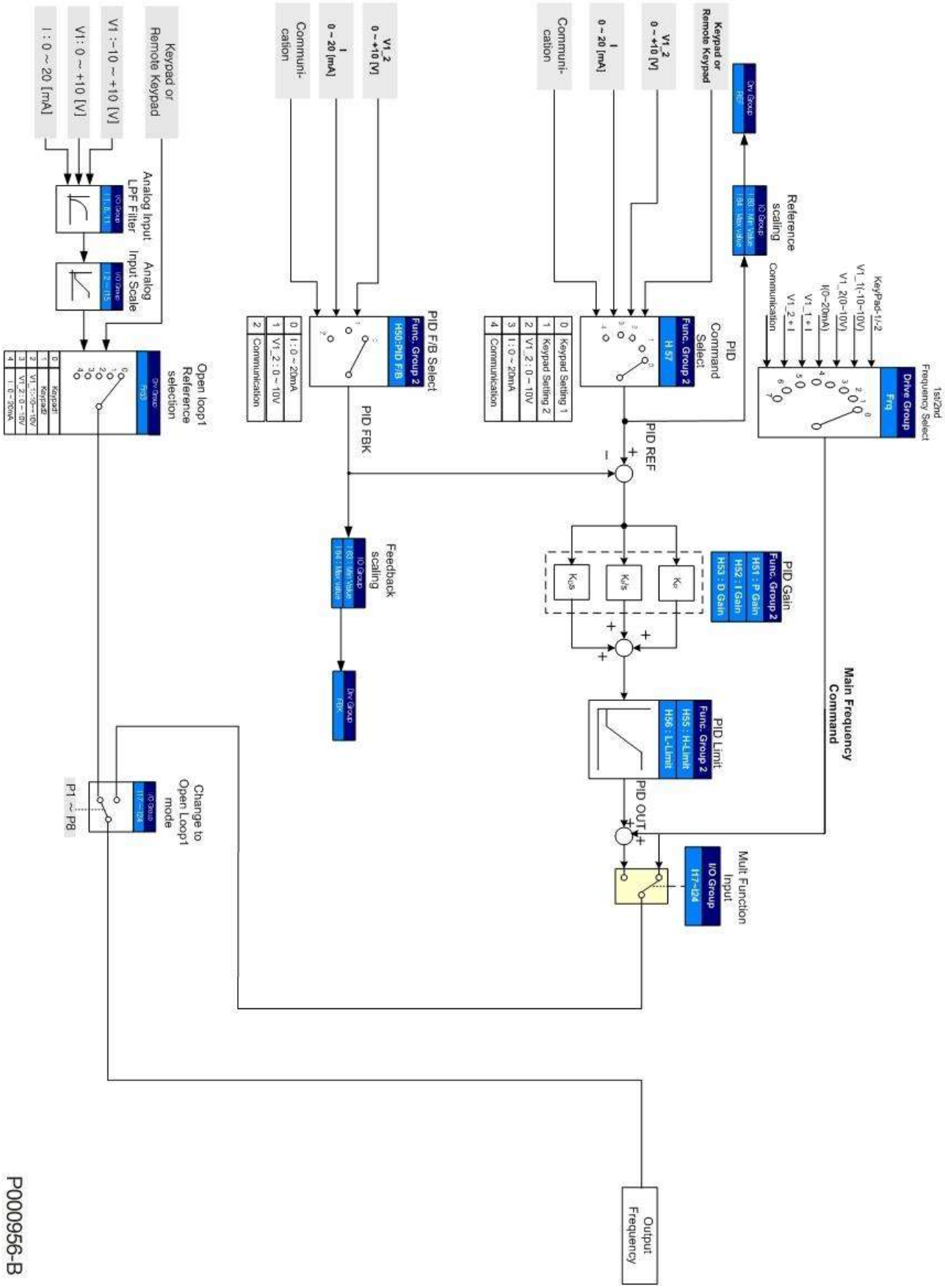

10.7.1 PID reference

LED display	Parameter name	Setting Range	Description	Factory defaults	Adj. during Run
H49	PID control select	0~1	Selects whether using PID control or not	0	X

- User can select the PID control mode in H49. For PID control, the setting value should be set to "1".
- Then REF and FBK category show.

LED display	Parameter name	Setting Range	Description		Factory defaults	Adj. during Run
H57	[PID reference source select]	0~4	Selects the PID reference source. The reference is indicated in "rEF" of Drive group.		0	X
			0	Keypad digital setting 1		
			1	Keypad digital setting 2		
			2	V1 terminal setting 2: 0~10V		
			3	I terminal setting: 0~20mA		
			4	Setting as RS-485 communication		

- One among Multistep frequency values 1-3 and 4-7 can also be used as a PID Reference. Multistep frequency values 1-3 are set in St1-St3 in the Drive Group; Multistep frequency values 4-7 are set in I30-I33 in the I/O Group.

LED display	Parameter name	Setting Range	Description			Factory defaults	Adj. During run
Frq	Frequency setting method	0 ~ 7	0	Digital	Keypad setting 1	0	X
			1		Keypad setting 2		
			2	Analog	V1 1: –10 ~ +10 [V]		
			3		V1 2: 0 ~ +10 [V]		
			4		Terminal I: 0 ~ 20 [mA]		
			5		Terminal V1 setting 1+ Terminal I		
			6		Terminal V1 setting 2+ Terminal I		
			7	Comm.	RS485		
			8		Digital Volume		

- The PID reference source can be selected in H57 code of function group2.
- The PID REF value can be changed and checked in the “rEF” of DRV group.
- PID value is basically created in ‘Hz’. ‘Hz’ is not a physical unit, so the internal PID reference is calculated as a ‘%’ of Maximum frequency (F21).

LED display	Parameter name	Setting Range	Description	Factory defaults	Adj. During run
rEF	PID Reference	-	PID control standard value setting	-	-
I89	Minimum Feedback value	0.0~100.0	Minimum Feedback Scaling factor	0.0	O
I90	Maximum Feedback value	0.0~100.0	Maximum Feedback Scaling factor	100.0	O

- “REF” code of drive group is the additional function code of this version for real unit and the display only code. Refer to the equation below.

$$\text{Real physical reference} = \frac{I90(Unit\,\max) - I89(Unit\,\min)}{Max\ Frequency} \times PIDreference(Hz) + I89(Unit\,\min)$$

- If you want to display the real physical reference with %, set each I89 and I90 to 0.0 and 100.0 (Factory default). If the set value of F21 and the PID command are each 50Hz and 20Hz respectively, then the PID reference should be like this: $\frac{100.0 - 0.0}{50.0} \times 20.0 + 0.0 = 40.0$.
- You can display the physical value with Bar. For example, the pressure sensor has minimum output 0V when 1.0 Bar and 10V when 20.0 bars. In this case, I89 and I90 should be set to 1.0 and 20.0 respectively.
- If the max frequency and the PID command are 50Hz and 20Hz each, then the PID reference should be like this. $\frac{20.0 - 1.0}{50.0} \times 20.0 + 1.0 = 8.6$

10.7.2 PID feedback

- PID feedback source is selected in H50 code. PID feedback means a kind of physical value like pressure, so it should be one of analog inputs.
- For PID feedback, several codes are used. Analog gain, bias, filters are first. Scaling for real value display is second. And there is additional code in drive group only for display.

LED display	Parameter	Setting range	Description	Factory defaults	Adj. During run
FBK	PID Feedback	-	Displays PID value with real unit	-	-
I6	Filter time constant for V1 input	0 ~ 9999	Adjust the responsiveness of the V1 input (0~+10V)	10	O
I7	V1 input Minimum voltage	0 ~ 10[V]	Set the minimum voltage of the V1 input.	0	O
I8	Frequency corresponding to I7	0 ~ 400[Hz]	Set the inverter output minimum output frequency at minimum voltage of the V1 input.	0.00	O
I9	V1 input Maximum voltage	0 ~ 10[V]	Set the maximum voltage of the V1 input.	10	O
I10	Frequency corresponding to I9	0 ~ 400[Hz]	Set the inverter output maximum frequency at maximum voltage of the V1 input.	50.00	O
I11	Filter time constant for I input	0 ~ 9999	Set the input section's internal filter constant for I input.	10	O
I12	I input minimum current	0 ~ 20[mA]	Set the minimum current of I input.	4.00	O
I13	Frequency corresponding to I12	0 ~ 400[Hz]	Set the inverter output minimum frequency at minimum current of I input.	0.00	O
I14	I input Max current	0 ~ 20[mA]	Set the maximum current of I input.	20.00	O
I15	Frequency corresponding to I14	0 ~ 400[Hz]	Set the inverter output maximum frequency at maximum current of I input.	50.00	O
H50	PID Feedback selection	0 ~ 1	0 Terminal I input (0 ~ 20 [mA]) 1 Terminal V1 input (0 ~ 10 [V])	0	X

- **There is additional code only for display in drive group.** This code shows feedback value with real unit when the ENT key is pressed. Feedback is calculated as follows:

  1st: Minimum analog value (I7, I12) and maximum analog value(I9,I14) (Normally, these are limited by sensor). If feedback signal is lower than low limit, feedback is limited to lower value. For example, minimum analog setting value is 2V and real feedback is 1.8V. In this case, internal feedback value is 2V.

  2nd: Minimum (I8, I13) and maximum frequency (I10, I15) when each minimum and maximum input value. These values are used for internal % of feedback values based on F21 Max frequency.

  For example, I7 setting value is 2V, I8 setting value is 10Hz, I9 is 8V, I10 setting value is 40Hz, F21 Max frequency is 50Hz. Under this condition, internal minimum % is 10/50 x 100 = 20 % when input is less than 2V and internal maximum % is 40/50 X 100 = 80% when input is higher than 8V.

  3rd: Only for display, Sinus M adopts one more scaling factor by internal %. I83 code is used for minimum display scaling factor and I84 is for maximum. With same condition above, I83 value is 1.0 and I84 value is 20.0. (Sinus M has limited LED to show, real unit is meaningless. So, display value can be any kind of unit like BAR, Ps). So FBK display code show 1.0 when input value is less than 2V and 20.0 when higher than 8V. The detailed equation is given below.

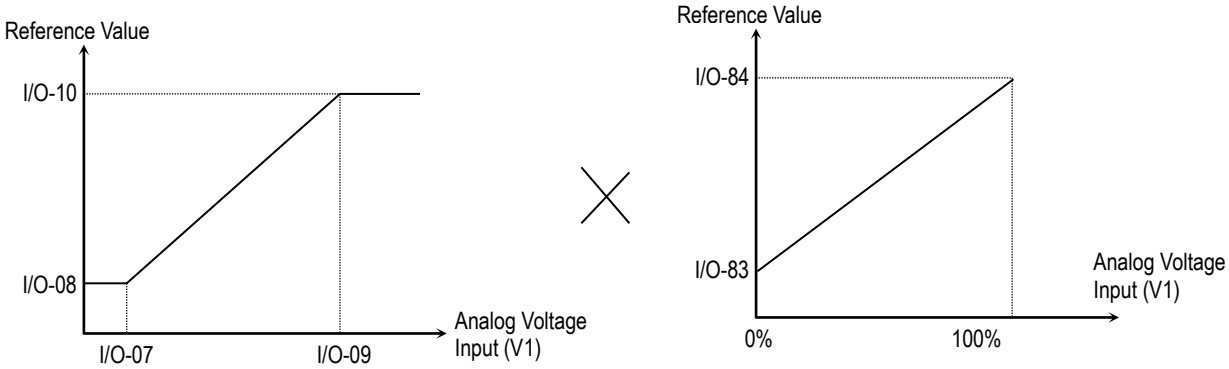

$$\text{FBK display} = \left(\left(\frac{I10 - I8}{I9 - I7}\right) \times (\text{Input Voltage} - I7) + I8\right) \times \frac{(I90 - I89)}{\text{MaxFreq}} + I89$$ when feedback is from V1

or $$\text{FBK display} = \left(\left(\frac{I15 - I13}{I14 - I12}\right) \times (\text{Input Current} - I12) + I13\right) \times \frac{(I90 - I89)}{\text{MaxFreq}} + I89$$ when feedback is from I.

For example, I7 setting value is 2V, I8 setting value is 10Hz, I9 setting value is 8V, I10 setting value is 40Hz, I89 setting value is 1.0, I90 setting value is 20.0, F21 max frequency is 50Hz. In this condition, when the real feedback value is 5V, FBK display code shows 10.5.

- If I89 setting value is 0.0 and I90 setting value is 100.0, unit is “%”.

10.7.3 PID Limit

LED display	Parameter name	Setting range	Description	Factory defaults	Adj. during Run
H55	PID output frequency low limit	0 to 400Hz	This parameter limits the low amount of the output frequency through the PID control.	50.00Hz	O
H56	PID output frequency high limit	0 to 400Hz	This parameter limits the high amount of the output frequency through the PID control.	0.5Hz	O

- PID low limit is the additional function code of Sinus M. H55 and H56 are related to each low limit and high limit. When the drive runs, the output frequency should be reached to low limit even if the feedback is higher than the reference. So, except during acceleration time from 0Hz to low limit, the output frequency is between low limit and high limit at any time.

10.7.4 Inverse PID

LED display	Parameter name	Setting range	Description		Factory defaults	Adj. during Run
H59	Inverse PID	0 ~ 1	0	Normal	0	X
			1	Inverse		

- To stabilize the system (negative feedback system), the sensor output is high when the real physical value is high. Sometimes, however, the sensor output is inverse, or the system needs higher output when the signal is low. In that case, the inverse PID is used.
- For this functionality, H59 code is used. PID output is increased when PID reference is higher than feedback setting value “0”. PID output is decreased when PID reference is higher than feedback setting value “1”.
- When H59 is set to 1, the FBK display is the same. That is to say, the feedback is the same, but the error is inverse.
- This functionality affects Sleep and Wake Up operation. (Refer to Sleep & Wake up functionality below).

10.7.5 Sleep & Wake up functionality

LED display	Parameter name	Setting range	Description	Factory defaults	Adj. during Run
H61	Sleep delay time	0 ~ 999 (sec)	Delay time in Sleep mode	60 sec	X
H62	Sleep frequency	0 ~ 400Hz	Frequency in Sleep mode	0.0Hz	O
H63	Wake-up level	0 ~ 50[%]	Wake Up level	2[%]	O

- In case output frequency of PID is under the Sleep frequency longer than the Sleep delay time, Inverter turns to the Sleep mode as exactly same the state of Stop. In order to return to normal state, Wake-up or restart after stop should be needed.
- If you don't want to use the Sleep mode, the Sleep frequency should be set under the low limit of PID, or the Sleep delay time should be set to "**0.0sec**".
- In case the feedback value drops below the specific value (PID Reference - Wake-up level), the Inverter restarts automatically. For example, if Reference=50%, Wake-up level=5%, and Feedback >45%, then Inverter restarts automatically, and Wake-up should be valid for Sleep mode only.
- When the drive is in sleep mode, the Sinus M never runs again automatically by wake-up operation after "STOP" command. In this case, the Sinus M operates after the Run command again.

10.7.6 Open Loop1 (Addtional)

LED display	Parameter	Min/Max range	Description			Factory defaults	Adj. During run
I17	Multi-function input terminal P1 define	0 ~ 29	0	Forward run command (FX)		0	O
			1	Reverse run command (RX)			
I18	Multi-function input terminal P2 define		2	Emergency Stop Trip		1	O
			3	Reset when a fault occurs			
I19	Multi-function input terminal P3 define		4	Jog operation command		2	O
			5	Multi-step freq- Low			
I20	Multi-function input terminal P4 define		6	Multi-step freq- Middle		3	O
			7	Multi-step freq- High			
I21	Multi-function input terminal P5 define		8	Multi Accel/Decel-Low		4	O
			9	Multi Accel/Decel-Middle			
I22	Multi-function input terminal P6 define		10	Multi Accel/Decel-High		5	O
			11	DC brake during hold			
I23	Multi-function input terminal P7 define		12	2nd motor select		6	O
			13	-Reserved-			
I24	Multi-function input terminal P8 define		14	-Reserved-		7	O
			15	Up-down	Frequency increase command		
			16		Frequency decrease command		
			17	3-wire operation			
			18	External trip: A contact (EtA)			
			19	External trip: B contact (EtB)			
			20	Self-diagnostic function			
			21	Change PID operation to normal operation			
			22	2nd source select			
			23	Analog hold			
			24	Accel/Decel hold			
			25	Up/Down Save Freq.Initialization			
			26	JOG-FX			
			27	JOG-RX			
			28	Open Loop1			
			29	Fire Mode			

10.7.7 Open Loop1 Source

LED display	Parameter name	Setting range	Description			Factory defaults	Adj. During run
FRQ3	Open Loop1 Frequency setting method	0 ~ 7	0	Digital	Keypad setting 1	0	X
			1		Keypad setting 2		
			2	Analog	V1 1: –10 ~ +10 [V]		
			3		V1 2: 0 ~ +10 [V]		
			4		Terminal I: 0 ~ 20 [mA]		
			5		Terminal V1 setting 1+ Terminal I		
			6		Terminal V1 setting 2+ Terminal I		
			7	Comm.	RS485		

- Multi-functional digital input terminal that is defined to Open Loop1 (28) is activated during “RUN”, the Sinus M should operate with the frequency in FRQ3 of V/F control regardless of the frequency in H40.
- In case the value set in H40 already belongs to V/F control, only the frequency setting method should be changed. If the value of Frq is identical to the value set for FRQ3, then the Inverter operates exactly as before.

10.7.8 Accel/Decel Change frequency

LED display	Parameter name	Setting range	Description	Factory defaults	Adj. During run
H69	Accel/Decel Change Frequency	0 ~ 400Hz	Accel/Decel change frequency setting	0Hz	X
I34	Multi time Accel 1	0~ 6000 [sec]	-	3.0	O
I35	Multi time Decel 1		-	3.0	
ACC	Accel time	0 ~ 6000 [sec]	During Multi-Accel/Decel operation, this parameter serves as Accel/Decel time 0.	5.0	O
dEC	Decel time			10.0	O

- The output frequency is less than this set value; the Sinus M changes the speed based on the 1st Acc/Dec time values. If higher than this value, it takes the Acc/Dec time in Drv Group.
- If even one of the Multifunctional digital input is set to XCEL,M,H, then this function should be invalid.

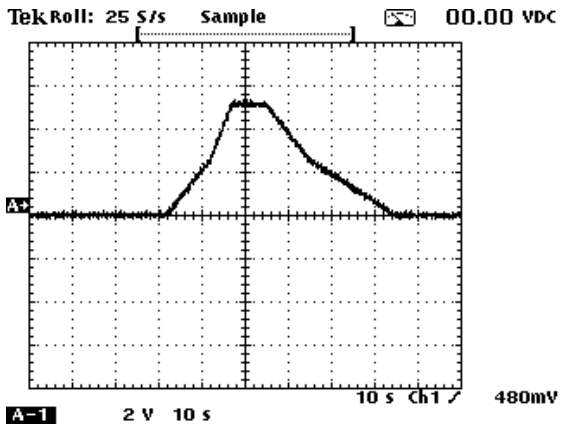

Parameter settings

Ref source	Keypad	Control mode	V/F
Ref value	50Hz	H69	25Hz
Acc time	10.0 sec	I34	20.0 sec
Dec time	20.0 sec	I35	40.0 sec

10.8 Auto-tuning

Group	Display	Parameter Name	Setting	Range	Default	Unit
Function group 2	**H41**	**[Auto tuning]**	**1**	0 ~ 1	0	-
	H42	[Stator resistance (Rs)]	-	0 ~ 14	-	Ω
	H44	[Leakage inductance (Lσ)]	-	0 ~ 300.00	-	mH

- Setting H41 as 1, the inverter measures the motor parameter.
- The measured motor parameters are used in Auto Torque Boost and Sensorless Vector Control.

⚠ **CAUTION:**
Auto tuning should be executed after stopping the motor. Motor shaft must not run during Auto tuning.

- H41: When H41 is set to 1 and press the Enter (●) key, Auto tuning is activated and "TUn" will appear on the display. When finished, "H41" will be displayed.
- H42, H44: The values of motor stator resistance and leakage inductance detected are displayed, respectively. When Auto tuning is skipped or H93 – [Parameter initialize] is done, the default value corresponding to motor type (H30) will be displayed.
- Press the STOP/RST key on the keypad or set on the EST terminal to stop the Auto Tuning.
- If Auto tuning of H42 and H44 is interrupted, the default value will be set. If H42 is correctly calculated and auto-tuning of leakage inductance (H44) is interrupted, the measured value of H42 is used and the default of leakage inductance (H44) is set.
- See following pages for the motor parameter default values.

⚠ **CAUTION:**
Do not enter any incorrect value as stator resistance and leakage inductance. Otherwise, the function of Sensorless vector control and Auto torque boost could be deteriorated.

10.9 Sensorless Vector Control

Group	Display	Parameter Name	Setting	Range	Default	Unit
Function group 2	**H40**	**[Control mode select]**	**3**	0 ~ 3	0	-
	H30	[Motor type select]	-	0.2 ~ 7.5	-	kW
	H32	[Rated slip frequency]	-	0 ~ 10	-	Hz
	H33	[Motor rated current]	-	0.5 ~ 50	-	A
	H34	[Motor No Load Current]	-	0.1 ~ 20	-	A
	H42	[Stator resistance (Rs)]	-	0 ~ 14	-	Ω
	H44	[Leakage inductance (Lσ)]	-	0~300.00	-	mH
Function group 1	F14	[Time for energizing a motor]	-	0.0~60.0	1.0	sec

- If H40 – [Control mode select] is set to 3, Sensorless vector control will become active.

⚠ **CAUTION:**
Motor parameters should be measured for high performance. It is highly recommended H41 – [Auto tuning] be done prior to proceeding operation via Sensorless vector control.

- Ensure that the following parameters are entered correctly for high performance in Sensorless vector control.
- H30: Select motor type connected to inverter output.
- H32: Enter rated slip frequency, (See chapter 10-6).
- H33: Enter motor nameplate rated current.
- H34: After removing the load, select H40 – [Control mode select] to 0 {V/F control} and run the motor at 50Hz. Enter the current displayed in Cur-[Output current] as motor no load current. If it is difficult to remove the load from the motor shaft, enter the value either 40 to 50% of the H33 – [Motor rated current] or the factory default.
- In case that torque ripple occurs at high speed, lower H34 [No load current] to 30%.
- H42, H44: Enter the value of the parameter measured during H41 – [Auto tuning] or the factory default.
- F14: Is the set time needed to magnetize which will run after this time. A low value set in F14 reduce the output available torque. The amount of the pre-exciting current is set in H34- [Motor no load current].
- Directly enter the motor nameplate values except when 0.2kW motor is used.

■ Factory default by motor ratings

Input voltage	Motor rating [kW]	Current rating [A]	No-load current [A]	Rated slip freq [Hz]	Stator resistance [Ω]	Leakage inductance [mH]
200	0.2	1.1	0.6	2.33	14.0	122.00
	0.4	1.8	1.2	3.00	6.70	61.00
	0.75	3.5	2.1	2.33	2.46	28.14
	1.5	6.5	3.0	2.33	1.13	14.75
	2.2	8.8	4.4	2.00	0.869	11.31
	3.7	12.9	4.9	2.33	0.500	5.41
	5.5	19.7	6.6	2.33	0.314	3.60
	7.5	26.3	11.0	2.33	0.196	2.89
	11.0	37.0	12.5	1.33	0.120	2.47
	15.0	50.0	17.5	1.67	0.084	1.12
	18.5	62.0	19.4	1.33	0.068	0.82
	22.0	76.0	25.3	1.33	0.056	0.95
400	0.2	0.7	0.4	2.33	28.00	300.00
	0.4	1.1	0.7	3.0	14.0	177.86
	0.75	2.0	1.3	2.33	7.38	88.44
	1.5	3.7	2.1	2.33	3.39	44.31
	2.2	5.1	2.6	2.00	2.607	34.21
	3.7	6.5	3.3	2.33	1.500	16.23
	5.5	11.3	3.9	2.33	0.940	10.74
	7.5	15.2	5.7	2.33	0.520	8.80
	11.0	22.6	7.5	1.33	0.360	7.67
	15.0	25.2	10.1	1.67	0.250	3.38
	18.5	33.0	11.6	1.33	0.168	2.46
	22.0	41.0	13.6	1.33	0.168	2.84

10.10 Energy-saving operation

Group	Display	Parameter Name	Setting	Range	Default	Unit
Function group 1	**F40**	**[Energy-saving operation]**	**-**	0 ~ 30	0	%

- Set the amount of output voltage to be reduced in F40.
- Set as the percent of Max output voltage.
- For fan or pump applications, energy consumption can be dramatically reduced by decreasing the output voltage when light or no load is connected.

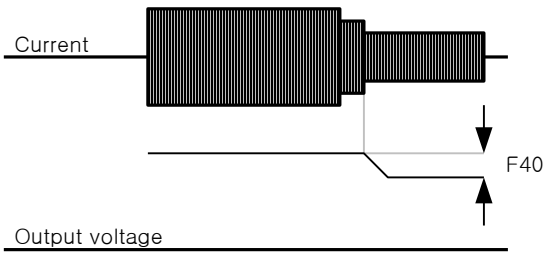

10.11 Speed search

Group	Display	Parameter Name	Setting	Range	Default	Unit
Function group 2	**H22**	**[Speed search select]**	**-**	0 ~ 15	0	
	H23	[Current level]	-	80 ~ 200	100	%
	H24	[Speed search P gain]	-	0 ~ 9999	100	
	H25	[Speed search I gain]	-		200	
I/O group	I54	[Multi-function output terminal select]	15	0 ~ 18	12	
	I55	[Multi-function relay select]	15		17	

- This is used to prevent possible fault occurring if the inverter supplies a load in movement (For example if the inverter is disabled, the motor idles; if the inverter is enabled when the motor is idling, it will search the motor speed).
- The inverter estimates the motor rpm based on output current when speed search is active.

- The following table shows 4 types of Speed search selection.

H22		Speed search H20 is set 1 [Power ON start]	Speed search after Instant Power Failure restart	Speed search if H21 is set 1 [Restart after fault reset]	Speed search during Acceleration
		Bit 3	Bit 2	Bit 1	Bit 0
	0	-	-	-	-
	1	-	-	-	✓
	2	-	-	✓	-
	3	-	-	✓	✓
	4	-	✓	-	-
	5	-	✓	-	✓
	6	-	✓	✓	-
	7	-	✓	✓	✓
	8	✓	-	-	-
	9	✓	-	-	✓
	10	✓	-	✓	-
	11	✓	-	✓	✓
	12	✓	✓	-	-
	13	✓	✓	-	✓
	14	✓	✓	✓	-
	15	✓	✓	✓	✓

- H23: Limits current during Speed search. Set as the percent of H33.
- H24, H25: Speed search is managed by a PI control. Adjust P gain and I gain corresponding to the load characteristics.
- I54, I55: Signal of active Speed search is given to Multi-function output terminal (MO) and Multi-function relay output (3ABC).

- EX) Speed search during Instant Power Failure restart

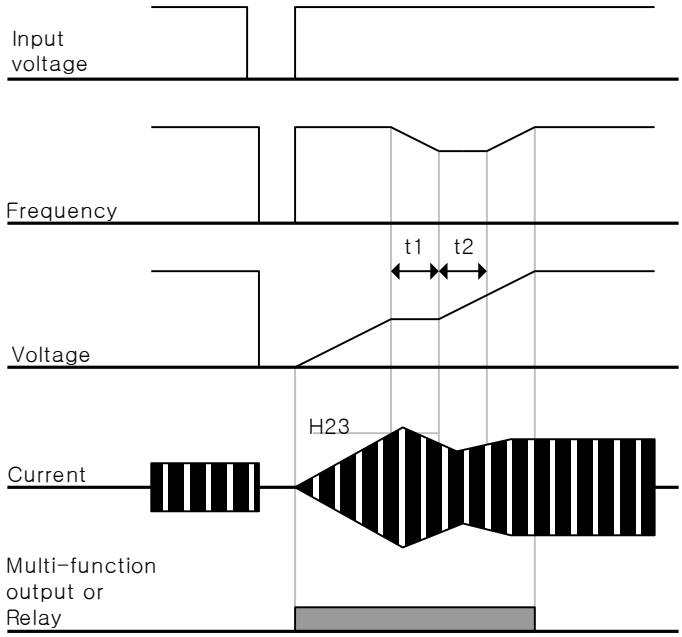

- When the input power is cut off due to instant power failure, the inverter trips (LV).
- When the power is restored, the inverter supplies the motor with the frequency stored before the low voltage trip and the voltage is increased due to speed search PI control.
- t1: If current is increasing over the preset level in H23, the voltage increasing will stop and the frequency is decreased.
- t2: If the opposite of t1 occurs, the voltage increasing starts again and the output frequency stops to decrease.
- When the frequency and voltage will reach their nominal level, the inverter will follow the acceleration ramp until the stored frequency before low voltage (LV) trip is reached.

- Speed search operation is suitable for loads with high inertia.
- Sinus M keeps normal operation when instant power failure occurs and power is restored in 15msec.

10.12 Auto restart try

Group	Display	Parameter Name	Setting	Range	Default	Unit
Function group 2	**H26**	**[Number of Auto Restart try]**	**-**	0 ~ 10	0	
	H27	[Auto Restart time]	-	0 ~ 60	1.0	sec

- This parameter sets the number of times auto restart is activated in H26.
- It is used to restart automatically after an alarm.

- H26: Auto restart will become active after the H27. H26 – [Number of Auto restart try] is reduced to 1 when a trip occurs. If the trip outnumbers exceeds the preset restart try, auto restart function is deactivated. If the setting is reset via the control terminal or the STOP/RST key on the keypad, the number of auto restart try (set by user) is automatically restored.
- If there is no more trip occurring for 30 sec after Auto restart operation, the H26 is restored to the preset value.
- When operation is stopped due to Low voltage {Lvt}, Inverter Overheat {Oht}, and Hardware Trip {HWt}, Auto restart will be deactivated.
- After the H27- [Auto Restart time], the motor starts acceleration automatically via speed search (H22-25).
- The following pattern is shown when H26 – [Number of auto restart try] is set to 2.

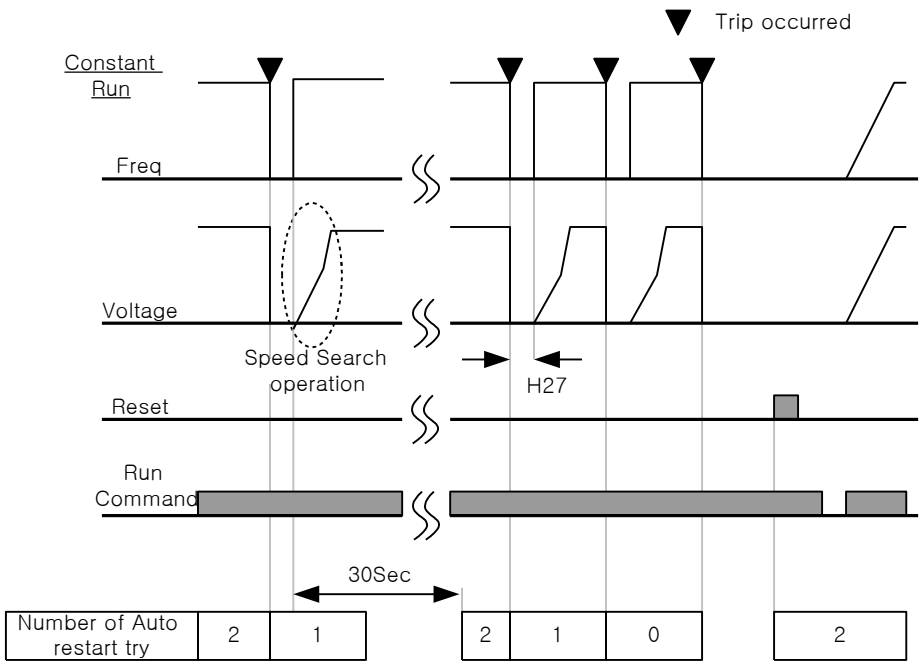

10.13 Operating sound select (Carrier frequency change)

Group	Display	Parameter Name	Setting	Range	Default	Unit
Function group 2	**H39**	**[Carrier frequency]**	**-**	1 ~ 15	3	kHz

- This parameter affects the sound of the inverter during operation.

H39	When setting carrier frequency high	Motor sound reduced
		Inverter heat loss increased
		Inverter noise increased
		Inverter leakage current increased

10.14 2nd motor operation

Group	Display	Parameter Name	Setting	Range	Default	Unit
Function group 2	H81	[2nd motor accel time]	-	0 ~ 6000	5.0	sec
	H82	[2nd motor decel time]	-	0 ~ 6000	10.0	sec
	H83	[2nd motor base freq.]	-	30 ~ 400	60.00	Hz
	H84	[2nd motor V/F pattern]	-	0 ~ 2	0	
	H85	[2nd motor Positive torque boost]	-	0 ~ 15	5	%
	H86	[2nd motor Negative torque boost]	-	0 ~ 15	5	%
	H87	[2nd motor stall prevention level]	-	30 ~ 150	150	%
	H88	[2nd motor electronic thermal level for 1 min]	-	50 ~ 200	150	%
	H89	[2nd motor electronic thermal level for continuous operation]	-	50 ~ 200	100	%
	H90	[2nd motor rated current]	-	1 ~ 50	26.3	A
I/O group	I17	[Multi-function Input terminal P1Function select]	-	0 ~ 29	0	
	~	~				
	I24	**[Multi-function Input terminal P8 Function select]**	**12**		7	

- **<u>Set the terminal among Multi-function input P1 through P5 for second motor operation.</u>**
- To define the terminal P5 as second motor operation, set I24 to 12.

- Used when an inverter operates 2 motors connected to two different types of the loads.
- 2nd motor operation does not drive 2 motors at the same time.
- As the figure below, when using two motors with an inverter by exchanging them, select one motor from 2 motors connected. When 1st selected motor operation is stopped, select a terminal for 2nd motor and define H81-H90 parameters to drive the 2nd motor.
- Define the 2nd motor select when a motor is stopped.
- H81 ~ H90 parameters function the same as 1st motor.

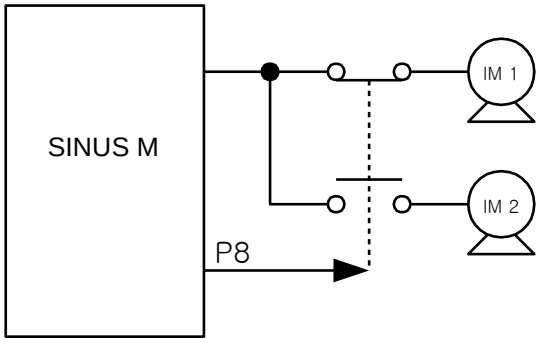

10.15 Self-Diagnostics function

- How to use Self-Diagnostics function

Group	Display	Parameter Name	Setting	Range	Default	Unit
Function group 2	**H60**	**Self-Diagnostic Selection**	**-**	0 ~ 3	0	-
I/O group	I17	Multi-function input terminal P1 selection	-	0 ~ 29	0	-
	~	~				
	I24	Multi-function input terminal P8 selection	20		7	-

- Select Self-Diagnostic function in H60, Function group 2.
- Define one terminal among P1~P8 terminals for this function.
- To define P8 for this function, set I24 to “20”.

⚠ **CAUTION:**
Take caution not to touch the inverter by hand or other objects while performing this function because current is flowing to the inverter output.

- Perform Self-diagnostic function after input/output wiring of the inverter is finished.
- This function enables the user to safely check for the IGBT fault, output phase open and short, and Ground fault without disconnecting the inverter wiring.
- There are 4 ways to select.

H60[1)]	Self-Diagnostic function	0	Self-Diagnostic disabled
		1	IGBT fault and Ground fault [2)]
		2	Output phase short & open circuit and Ground fault
		3	Ground fault (IGBT fault, Output phase short and open circuit)

1) Selecting the higher number performs the lower number’s function.
2) Ground fault of U phase in 2.2KW ~ 4.0KW inverters and ground fault of V phase in other rating inverters may not be detected when selecting “1”. Select 3 to make sure to detect all phase of U, V, W.

- When setting H60 to a specific value from 1 to 3 and turn the terminal defined for this function among P1 ~ P8 terminals ON, the corresponding function is conducted, displaying “dIAG” and the previous menu will be displayed when this function is completed.
- To stop this function, press STOP/RESET key on the keypad, turn the defined terminal OFF or turn the EST terminal ON.
- When an error occurs during this function, “FLtL” will be displayed. While this message is displayed, press Enter key (■), the fault type is displayed and pressing the UP(▲) or

Down(▼) key shows When the fault occurs while this function is being performed, press Stop/Reset key or turn the RESET-defined terminal ON to reset the fault.

- The following table shows the fault type while this function is active.

No.	Display	Fault type	Diagnosis
1	**UPHF**	Switch above IGBT's U phase fault	Contact your sales representative.
2	**UPLF**	Switch below IGBT's U phase fault	
3	**vPHF**	Switch above IGBT's V phase fault	
4	**vPLF**	Switch below IGBT's V phase fault	
5	**WPHF**	Switch above IGBT's W phase fault	
6	**WPLF**	Switch below IGBT's U phase fault	
7	**UWSF**	Output short between U and W	Check for the short of inverter output terminal, motor connection terminal or the proper motor connection.
8	**vUSF**	Output short between U and V	
9	**WvSF**	Output short between V and W	
10	**UPGF**	Ground fault at U phase	Check for the ground fault occurred at inverter output cable or motor or motor insulation damage.
11	**vPGF**	Ground fault at V phase	
12	**WPGF**	Ground fault at W phase	
13	**UPOF**	Output open at U phase	Check for proper connection of the motor to the inverter output or proper motor connection.
14	**vPOF**	Output open at V phase	
15	**WPOF**	Output open at W phase	

10.16 Frequency setting and 2nd drive method select

Group	Display	Parameter Name	Setting	Range	Default	Unit
Drive group	**drv**	**Drive mode 1**	**-**	**0 ~ 3**	**1**	**-**
	Frq	**Frequency mode 1**	**-**	**0 ~ 8**	**0**	**-**
	drv2	**Drive mode 2**	**-**	**0 ~ 3**	**1**	
	Frq2	**Frequency mode 2**	**-**	**0 ~ 7**	**0**	
I/O group	**I17~I24**	**Multi-function input terminal P1 select**	-	**0 ~ 29**		

- Drive mode 1 is used when the input set as 2nd source is not entered into multi-input (I17~I24)
- When setting a multifunction digital input as a second source (22), Drive Mode 2 can set the frequency value and send commands. This is used when communication is suspended and local operating mode is resumed.
- The switching method for Drive mode 1 and Drive mode 2 is as follows: if multi-input terminal set as Drive mode 2 is off, it used as Drive mode 1; If multi-input terminal set as Drive mode 2 is on, it used as Drive mode2.

- Selects the self drive in the 2nd switching of drv2 among the followings

drv2	Drive mode 2	0	Operation via Run/Stop key on the Keypad	
		1	Terminal operation	FX: Forward Run command
				RX: Reverse Run command
		2		FX: Run/Stop command
				RX: Forward/Reverse command
		3	Operation via communication	

- Selects the self drive in the 2nd switching of Frq2 among the following:

Frq2	Frequency mode 2	0	Digital	Keypad digital frequency mode1
		1		Keypad digital frequency mode2
		2	Analog	V1 terminal setting1: –10 ~ +10V
		3		V1 terminal setting2: 0 ~ +10V
		4		I terminal: 0 ~ 20mA
		5		V1 terminal setting1 + I terminal
		6		V1 terminal setting2 + I terminal
		7	Setting via RS-485 communication	

- The following is an example for switching of drv1 and drv2.

Group	Display	Parameter Name	Setting	Range	Default	Unit
Drive group	**drv**	**Drive mode 1**	**-**	**0 ~ 3**	**1**	**-**
	Frq	**Frequency mode 1**	**-**	**0 ~ 8**	**0**	**-**
	drv2	**Drive mode 2**	**-**	**0 ~ 3**	**1**	
	Frq2	**Frequency mode 2**	**-**	**0 ~ 7**	**0**	
I/O group	**I24**	**Multi-function input terminal P8 input terminal**	-	**0 ~ 29**	**7**	

- The following figure is drawn when setting is like the above and command frequency is 30 [Hz], F4 [stop method]=0.

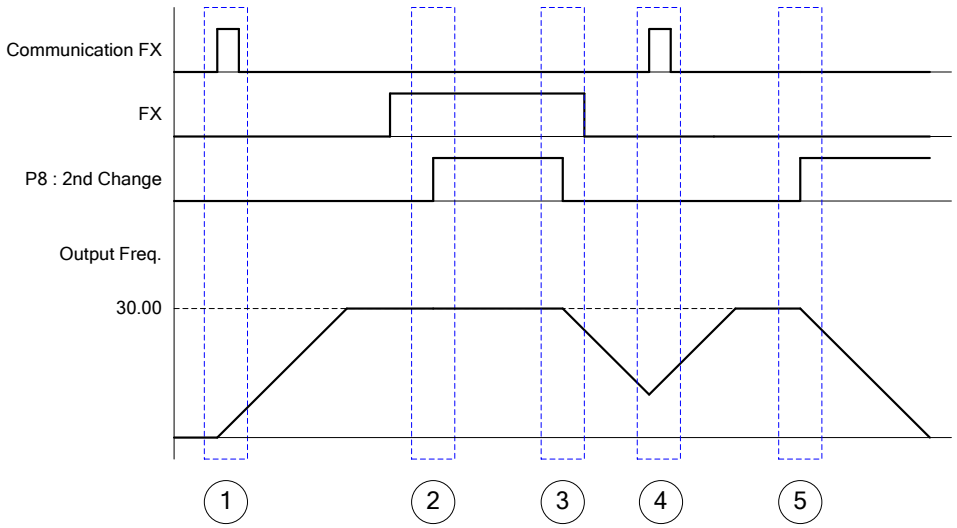

① Accelerate for accel time up to setting frequency by Drive 1 mode, FX signal.

② Drive continuously under FX is ON because DRV2 is 1 when P8 terminal input is ON and change into 2nd.

③ Stop gradually as stop command because DRV is communication drive when P8 terminal input is OFF and change into 1st.

④ Accelerate up to setting frequency for Drive 1 mode, FX signal is ON.

⑤ Stop gradually under FX is OFF because DRV2 is 1 when P8 terminal input is ON and change into 2nd.

⚠ CAUTION

If you press ON while multi-function input terminal (P1 ~ P8) is set to 2nd Source, frequency command and drive command is changed to Drive mode 2. So you should check Drive mode 2 before configuring the multi-function terminal.

10.17 Over voltage trip prevention deceleration and Power Braking

Group	Display	Parameter Name	Setting	Range	Default	Unit
Function group 1	F4	Select stop method	3	0 ~ 3	0	
	F59	BIT 0: Stall prevention under Accel BIT 1: Stall prevention under constant speed BIT 2: Stall prevention under Decel	-	0 ~ 7	0	
	F61	Select voltage limit under Decel	-	0 ~ 1	0	

- To prevent overvoltage trip when reducing speed, set BIT2 of F59 to 1 and set 3 of F4 for Power Braking.

- Overvoltage trip prevention when reducing speed: this function prevents overvoltage trip when reducing speed or at stop by using the regeneration braking power.
- Power Braking: Adjusting the deceleration slope or accelerate again, when inverter's DC voltage rises above a certain level by the electric motor's regeneration energy. It can be used when short deceleration time without braking resistance is needed. However, be aware that the deceleration time can get longer than the set one and when it's used at a load that frequently decelerates, be cautious of damage caused by the motor's overheating.

⚠ CAUTION

Stall prevention and Power Braking only operate when decelerating, and Power Braking has priority. That is, when BIT2 of F59 and Power Braking of F4 are both set, Power Braking operates.
F61 (selecting voltage restriction when decelerating) is visible when BIT2 of F59 is set.
Overvoltage trip may occur, if the deceleration time is too short or inertia is too big.

10.18 External brake control

Group	Code	Name	Set nr.	Limit	Default	Unit
Function Group 2	H40	Controlling method select	0	0~3	0	
In/Output Group	I82	Brake open current	-	0~180.0	50.0	%
	I83	Brake open delay time	-	0~10.00	1.00	Sec.
	I84	Brake open CW Freq.	-	0~400	1.00	Hz
	I85	Brake open CCW Freq.	-	0~400	1.00	Hz
	I86	Brake close delay time	-	0~10.00	1.00	Sec.
	I87	Brake close Freq.	-	0~400	2.00	Hz
	I54	Multi-function output terminal select	19	0~ 19	12	
	I55	Multi-function relay select	19	0~ 19	17	

- I82~87 is visible only when I54 or I55 is set to 19.

- Used to control on, off operation of electronic brake of a load system. It only operates when the set value of control mode (H40) is 0 (V/F control). Build sequence after checking set control mode.
- When the brake control is operating, DC brake and dwell run do not operate when starting up.

- Brake open Sequence
  - When the electric motor is given instructions to run, the inverter accelerates CW or CCW to the brake open frequency (I84, I85). After reaching the brake open frequency, the current running through the motor reaches brake open current (I82) and puts out brake open signals to multi-function output terminals or output relays that are set for brake control.

- Brake close sequence
  - During run, the electric motor decelerates when stop instruction is given. When output frequency reaches brake close frequency, it stops decelerating and puts out brake close signal to the set output terminal. Frequency turns “0” after keeping the frequency for brake close delay time (I86).

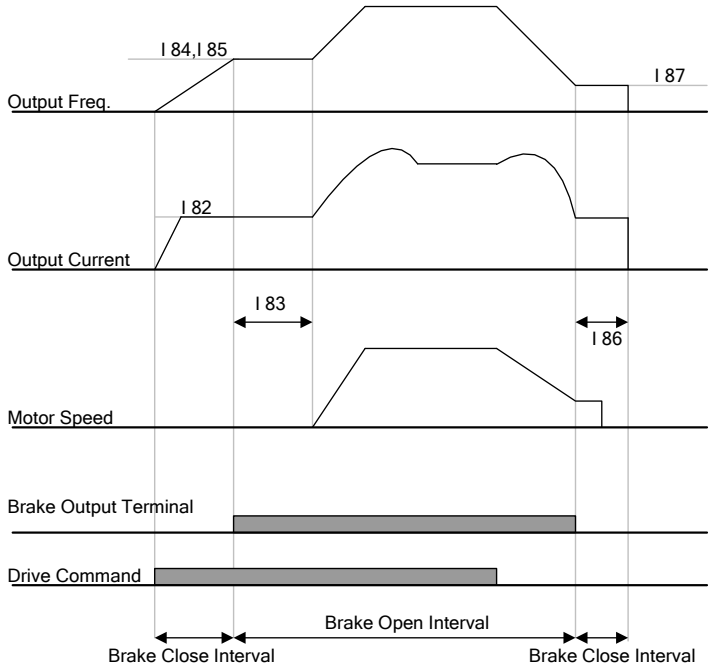

In Case of V/F Constant Control on Control Mode Select

⚠ CAUTION

External Brake control is only used in V/F steady control, and the brake open frequency has to be set smaller than the brake close frequency.

10.19 Kinetic energy buffering

Group	Display	Parameter Name	Setting	Range	Default	Unit
Function Group 2	H64	KEB operation select	1	0~1	0	
	H65	KEB operation start level	-	110.0 ~ 140.0	130.0	-
	H66	KEB operation stop level	-	110.0 ~ 145.0	135.0	%
	H67	KEB operation gain	-	1 ~ 20000	1000	-
	H37	Load inertia	0	0~2	0	-

- When power failure occurs in the input power, the DC link voltage of the inverter gets low and low voltage trip occurs. Its function is to maintain the voltage of DC link by controlling output frequency of the inverter during the time of power failure. That is, it can keep the time from the point of power failure to low voltage trip long.
- Selects energy buffering operation when input power is cut. If H64 is set to 0, it operates normal deceleration run until low voltage occurs. When H64 is set to 1, it controls the inverter output frequency and charges the energy occurred from the motor to the inverter DC.
- H65 (KEB operation start level), H66 (KEB operation stop level): Selects starting and stopping point of the energy buffering operation. Set the stop level (H65) higher than the start level (H66) setting the low voltage trip level as standard.
- H37 (Load inertia): Uses the momentum amount of the load inertia to control energy buffering operation. If the inertia ratio is set high, the frequency change range gets small when running energy buffering.

10.20 DRAW Control

Group	Display	Parameter Name	Setting	Range	Default	Unit
Function Group 1	F70	DRAW mode select	-	0 ~ 3	0	-
	F71	DRAW rate	-	0.0 ~ 100.0	0.0	%

- Draw control is a sort of Open Loop tension control. Draw is the ratio of speed difference between one roll and the other. Tension is generated as in the following equations:

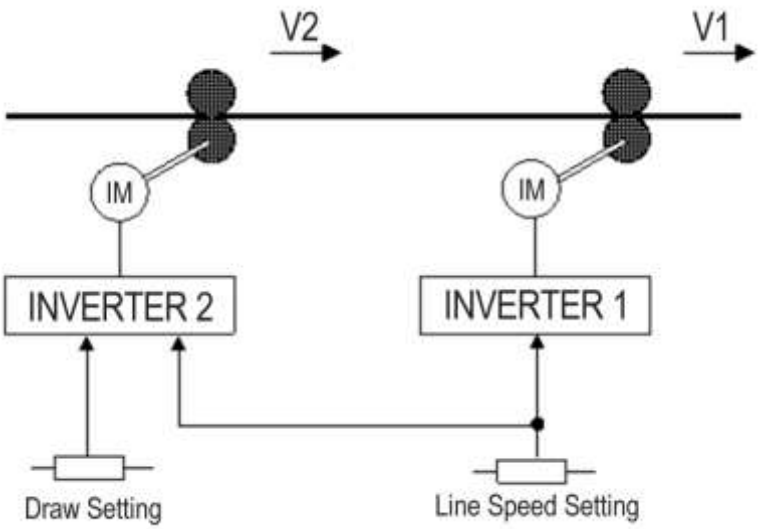

$$D = \frac{V1 - V2}{V2}$$

$$T = E \times S \times D = E \times S \times \frac{V1 - V2}{V2}$$

Where

V1, V2: Transfer speed of each roll (m/min)

T: Tension (kg)

E: Elasticity coefficient of processed material (kg/mm^2)

S: Sectional area of processed material (mm^2)

- The rate reflected in the output frequency differs according to the selection of F70 (DRAW mode select)

F70	Draw Operation	0	Draw not operated
		1	V1(0~10V) input
		2	I(0~20mA) input
		3	V1(–10~10V) input

- Select 1 and 2 for F70

  The center value of analogue input (selected by the set value of I6~I15) as standard, if the input is big it gets (+), if small (-) and gets reflected in the output frequency as the ratio set in F71.

- Select 3 for F70

  0V as standard, if analog input voltage is big, it gets (+), if small (-) and gets reflected in the output frequency as the rate set in F71.

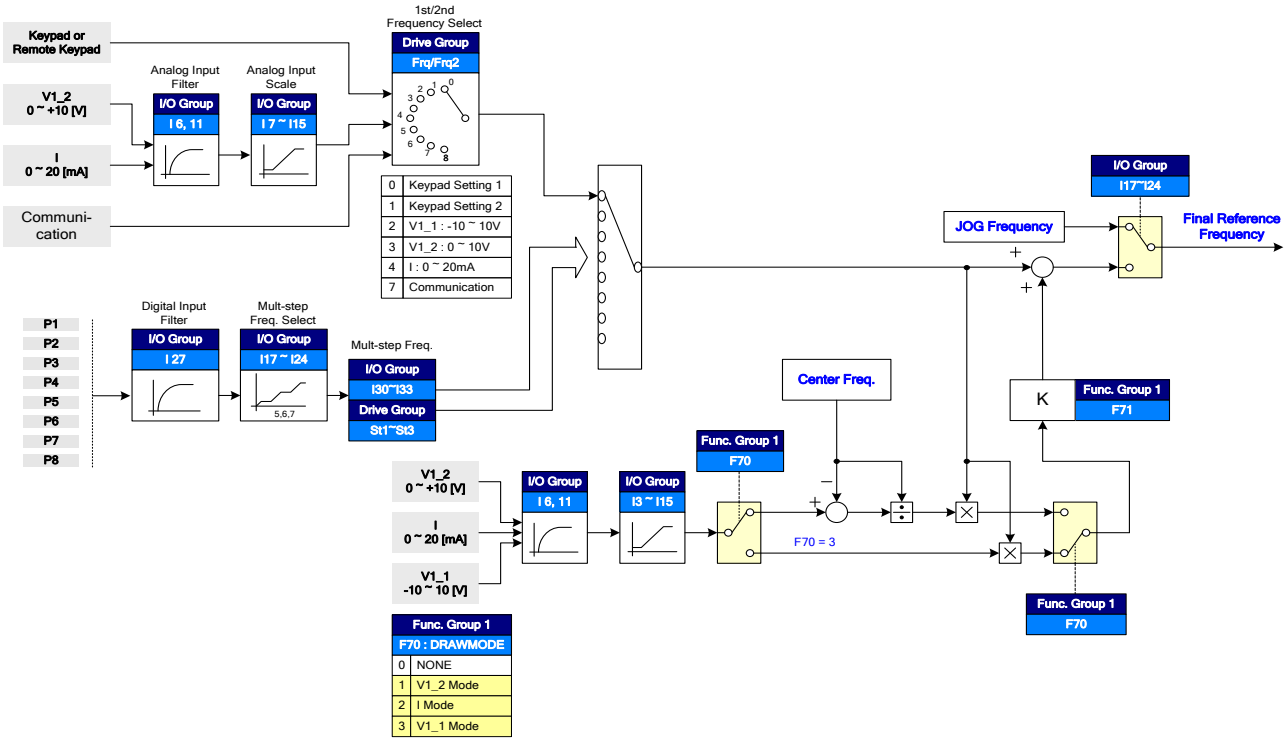

- DRAW operation example

If draw operation is set to 30Hz, F70=3(V1: –10V ~10V), F71=10.0% selected, (I3~I15 = factory defaults) Frequency that gets changed by DRAW operation is 27Hz(V1=–10V) ~33Hz(V1=10V)

⚠ CAUTION
When operating DRAW, set command frequency to FRQ/FRQ2 and set the rest of it from F70 (DRAW mode select). For example, if FRQ=2(V1) and F70=1(V1), it does not operate.

10.21 2 Phase PWM

Group	Display	Parameter Name	Setting	Range	Default	Unit
Function Group 2	H48	PWM controlling mode 0: NORMAL PWM 1: 2 phase PWM	**1**	0 ~ 1	0	

- Heat loss and leakage current from inverter can be reduced when H48 is set to 1(2 phase PWM) according to the load ratio.

10.22 Cooling fan control

Group	Display	Parameter Name	Setting	Range	Default	Unit
Function group 2	**H77**	**[Cooling fan control]**	**1**	0 ~ 1	0	

- Control the On/ Off of the heatsink cooling fan.

- When it is set to 0:

-. Cooling fan begins to operate when power is ON.

-. Cooling fan is stopped when inverter main circuit voltage becomes low due to power off.

- When it is set to 1:

-. Cooling fan begins to operate when power is turned ON with RUN command ON.

-. Cooling fan is stopped when RUN command is Off and when the deceleration ramp is end.

-. Cooling fan keeps operating when heatsink temperature exceeds a certain limit regardless of RUN command.

-. Used when frequent Run/Stop or long time stop is required. This may make the cooling fan life longer.

10.23 Operating mode selection when cooling fan trip occurs

Group	Display	Parameter Name	Setting	Range	Default	Unit
Function group 2	**H78**	**[Operating mode when cooling fan trip occurs]**	**-**	0 ~ 1	0	-
I/O group	I54	[Multi-function output terminal select]	18	0 ~ 18	12	-
	I55	[Multi-function relay select]	18	0 ~ 18	17	-

- Select 0 or 1 in H78 code.
- If H78 code is set to 0 (continuous operation), alarm can be output in I54 or I55.

▸ 0: continuous operation when cooling fan trip occurs.

-. Operation is not stopped regardless of cooling fan trip.

-. When I54 or I55 is set to 18 (cooling fan fault alarm), fault alarm signal can be detected using Multi-function output terminal or Multi-function relay.

⚠ **Caution:**

▸ If operation is continued after cooling fan trip occurs, overheat trip may happen and protective function be activated. It also reduces the life of main components due to rise in inverter inner temperature.

▸ 1: Operation stops at cooling fan fault

-. When cooling fan fault occurs, FAn message is displayed on the keypad and operation is stopped.

-. If I54 or I55 is set to 17(Fault output), fault message is detected by the Multi-function output terminal or Multi-function relay.

10.24 Parameter read/write

Group	Display	Parameter Name	Setting	Range	Default	Unit
Function group 2	H91	[Parameter read]	1	0 ~ 1	0	
	H92	[Parameter write]	1	0 ~ 1	0	

- Used to read/write Inverter Parameters using remote keypad.

> ⚠ **Caution:**
> Take caution when Parameter write (H92) is executed. By doing this, operation inverter parameters are cleared and the parameters of remote the remote keypad are copied into the inverter.

▸ Parameter read

Step	Note	Keypad display
1	Move to H91 code.	H91
2	Press Enter (●) key once.	0
3	Press Up (▲) key once.	rd
4	Press Enter (●) key twice.	rd
5	H91 is displayed when Parameter read is finished.	H91

▸ Parameter write

Step	Note	Keypad display
1	Move to H92 code.	H92
2	Press Enter (●) key once.	0
3	Press Up (▲) key once.	Wr
4	Press Enter (●) key twice.	Wr
5	H91 is displayed when Parameter read is finished.	H92

During parameter reading (H91), the display of the remote keypad shows “rd”(Read) and “vr”(Verify), whereas during parameter writing (H92) the display only shows “wr”(Write).

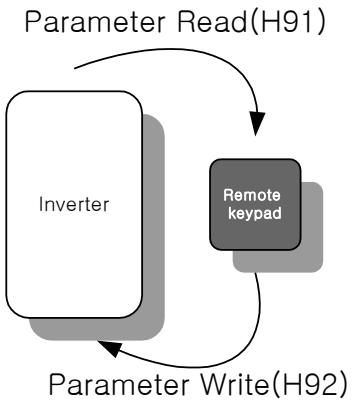

10.25 Parameters Restore default / Lock

- Parameters restore

Group	Display	Parameter Name	Range		Default
Function group 2	**H93**	**[Parameter initialize]**	**0**	-	0
			1	4 groups initialize	
			2	Drive group initialize	
			3	F1 group initialize	
			4	F2 group initialize	
			5	I/O group initialize	

- Select the group to be initialized and perform it in H93 code.

▸ Press Enter (●) key after set H93. H93 will be displayed again after initialization is complete.

- Password register

Group	Display	Parameter Name	Setting	Range	Default	Unit
Function group 2	**H94**	**[Password register]**	**-**	0 ~ FFFF	0	
	H95	[Parameter lock]	-	0 ~ FFFF	0	

- Register password for Parameter lock (H95).
- Password should be Hex decimal. (0 ~ 9, A, B, C, D, E, F)

⚠ **Caution:**
Do not forget the registered password. It is used when unlocking the parameters.

▸ Factory default password is 0. Enter the new password except 0.

▸ Follow the steps below when you register the password for the first time.

Step	Note	Keypad display
1	Move to H94 code.	H94
2	Press Enter (●) key twice.	0
3	Register password. (Ex: 123)	123
4	123 will blink when Enter (●) key is pressed.	123
5	Press Enter (●) key.	H94

▸ Follow the table below to change the password. (Current PW: 123 → New PW: 456)

Step	Note	Keypad display
1	Move to H94 code.	H94
2	Press Enter (●) key.	0
3	Enter any number (e.g.: 122).	122
4	Press the Enter (●) key. 0 is displayed because wrong value was entered. Password cannot be changed in this status.	0
5	Enter the right password.	123
6	Press Enter (●) key.	123
7	Enter the new password.	456
8	Press the Enter (●) key. Then “456” will blink.	456
9	Press Enter (●) key.	H94

- Parameter Lock

Group	Display	Parameter Name	Setting	Range	Default	Unit
Function group 2	**H95**	**[Parameter lock]**	**-**	0 ~ FFFF	0	
	H94	[Password register]	-	0 ~ FFFF	0	

▪ This parameter is used to lock the user-set parameters using the password.

▸ See the table below to lock the user-set parameter via the H94 – [Password Register].

Step	Note	Keypad display
1	Move to H95 code.	H95
2	Press Enter (●) key.	UL
3	Parameter value can be changed in UL (Unlock) status.	UL
4	Press Enter (●) key.	0
5	Enter the password created in H94 (e.g.: 123).	123
6	Press Enter (●) key.	L
7	Parameter value cannot be changed in L (Lock) status.	L
8	Press Enter (●) key.	H95

- See the table below to unlock the user-set parameter via password.

Step	Note	Keypad display
1	Move to H95 code.	H95
2	Press Enter (●) key.	L
3	Parameter value cannot be changed in L(Lock) status.	L
4	Press Enter (●) key.	0
5	Enter the password created in H94 (e.g.: 123).	123
6	Press Enter (●) key.	UL
7	Parameter value can be changed in UL (Unlock) status. While seeing this message…	UL
8	Press Enter (●) key.	H95

10.26 Functions related to “Fire Mode”

- The Fire mode function is used in all the applications required the continuous operation of the equipment even if the environmental conditions do not allow it, for example as in pumps and fans (HVAC) which have to operate during a fire emergency. The drive should then ignore any alarm tripped and should automatically and endlessly resets even serious trips. When the Fire mode is activated, the inverter might be damaged.
- Due to the activation of the Fire Mode function, the drive guarantee should be no longer valid if the conditions for activation of a heavy fault occur. It is possible to detect when a heavy alarm has tripped if the value of I96 changes to “1”. This will void the drive guarantee. Also, the value “1” is not initialized.
- When in Fire mode, the Sinus M changes its several internal status as below.

A. Control mode changes to V/F.

B. The value in I88 becomes the frequency reference. This value has priority over any kind of reference.

C. Acceleration/deceleration time is 10 sec. and cannot be changed.

D. The trips below are ignored, but the fault display just shows what trip has occurred in the Drive group, whilst the digital output that is defined as “alarm trip” is activated even if the drive is still controlling the connected motor.

- Emergency Stop (Est)
- External Trip – A (EtA)
- External Trip – B (EtB)
- Inverter Overheated (Oht)
- Inverter Overload (IOL)
- Electrical Thermal trip (EtH)
- Output Phase Loss (POt)
- Motor Overload (Olt)
- Fan Trip (Fan)

E. The Sinus M will endlessly reset the alarms below regardless of the auto-retry number. However, Auto-retry delay time (H27) is used.

- Overcurrent (Oct)
- Overvoltage (Ovt)
- Low Voltage (Lut)
- Ground Trip (GFt)

F. The Sinus M cannot operate when the alarms below have tripped, that damage the inverter.

- Self Diagnosis IGBT Broken (FLtL)
- Hardware Failure (HWt)
- Communication Error with I/O board (Err)

LED display	Parameter name	Setting range	Description	Factory defaults	Adj. during Run
I88	Fire Mode Frequency	0.00~400.00Hz	Command frequency when in Fire mode	50.00 Hz	O
I96	Fire Mode Evidence	0 ~ 1	0 : No trip occurred during Fire mode 1 : Trip occurred during Fire mode	-	Display only

Caution: Once the Fire mode is activated, the drive cannot return to its previous operating conditions. To restore normal operating conditions, turn off and on the inverter in order to reboot its control board.

Caution: Once the Sinus M enters the Fire mode, no alarm previously tripped may be reset.

To deactivate the Fire mode, turn off and on the inverter AND disable the Fire Mode input. Failure to do so will prevent the alarms tripped from being displayed when the Sinus M is normally operating.
When in Fire-mode, the target frequency should be 50Hz and the ACC/DEC time should be set to 10sec. If the user attempts to change these values when the inverter is running, the output frequency is left unchanged (50Hz), whereas the new values for ACC/DEC become effective only after disabling the Fire mode.

Notes:

CHAPTER 11 - MONITORING

11.1 Operating status monitoring

- Output current

Group	Display	Parameter Name	Setting	Range	Default	Unit
Drive group	**CUr**	**[Output current]**	**-**			

▪ Inverter output current can be monitored in Cur.

- Motor RPM

Group	Display	Parameter Name	Setting	Range	Default	Unit
Drive group	**rPM**	**[Motor RPM]**	**-**			
Function group 2	H31	[Number of motor poles]	-	2 ~ 12	4	
	H49	[PID control select]	-	0 ~ 1	0	
	H74	[Gain for Motor rpm display]	-	1 ~ 1000	100	%

▪ Motor rpm can be monitored in rPM.

▸ When H40 is set to 0 {V/F control} or 1 {PID control}, the Inverter output frequency (f) is displayed in RPM using the formula below. Motor slip is not considered.

$$RPM = \left(\frac{120 \times f}{H31}\right) \times \frac{H74}{100}$$

▸ H31: Enter the number of motor poles shown on the motor nameplate.

▸ H74: This parameter is used to change the motor speed display at run speed (r/min) or mechanical speed (m/min).

- Inverter DC Link Voltage

Group	Display	Parameter Name	Setting	Range	Default	Unit
Drive group	**dCL**	**[Inverter DC Link Voltage]**	**-**			

▪ Inverter DC link voltage can be monitored in dCL.

▸ $\sqrt{2}$ times the value of input voltage is displayed in dCL while motor is at a stop.

- User display select

Group	Display	Parameter Name	Setting	Range	Default	Unit
Drive group	**vOL**	**[User display select]**	**-**			
Function group 2	H73	[Monitoring item select]	-	0 ~ 2	0	

- The selected item in H73- [Monitoring item select] can be monitored in vOL- [User display select.
- If output power or torque is selected, Por or tOr will be displayed.

▸ H73: Select one of the desired item to be shown.

H73	[Monitoring item select]	0	Output voltage [V]	vOL
		1	Output power [kW]	POr
		2	Torque [kgf · m]	tOr

▸ Enter motor efficiency indicated on motor nameplate in H36 to display the correct torque value.

- Power on display

Group	Code	Parameter	Setting range		Initial
Function group 2	**H72**	**[Power on display]**	**0**	Frequency command (0.00)	0
			1	Accel time (ACC)	
			2	Decel time (DEC)	
			3	Drive mode (drv)	
			4	Frequency mode (Frq)	
			5	Multi-step frequency 1 (St1)	
			6	Multi-step frequency 2 (St2)	
			7	Multi-step frequency 3 (St3)	
			8	Output current (CUr)	
			9	Motor rpm (rPM)	
			10	Inverter DC link voltage (dCL)	
			11	User display select (vOL)	
			12	Fault display 1(nOn)	
			13	Operating direction select (drC)	
			14	Output current 2	
			15	Motor rpm 2	
			16	Inverter DC link voltage 2	
			17	User display select 2	

- Select the parameter to be displayed on the keypad after Power ON.
- The output current and motor rpm are displayed when 8, 9, 14, 15 are set.

11.2 Monitoring the I/O terminal

- Input terminal status monitoring

Group	Display	Parameter Name	Setting	Range	Default	Unit
I/O group	**I25**	**[Input terminals status display]**	**-**			

▪ Current input terminal status (ON/Off) can be monitored in I25.

▸ For example: The following is displayed when P1, P3, P4 are ON and P2, P5 are OFF.

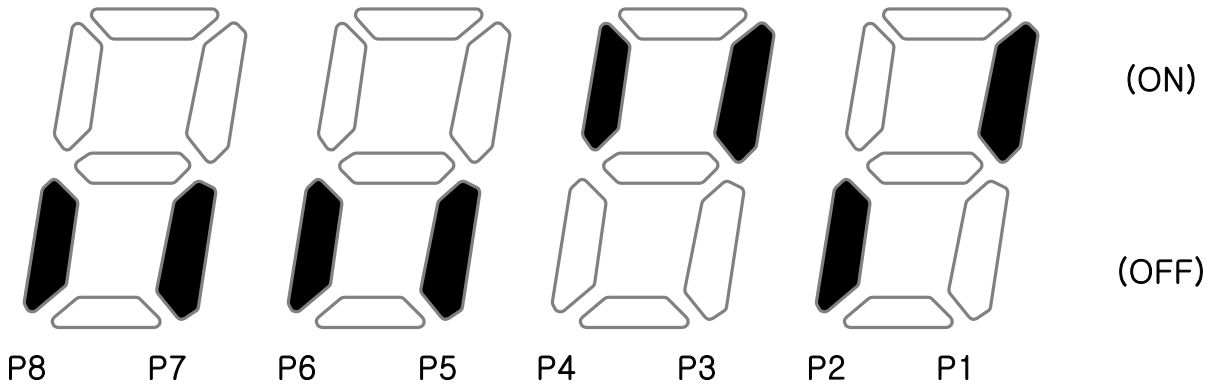

- Output terminal status monitoring

Group	Display	Parameter Name	Setting	Range	Default	Unit
I/O group	**I26**	**[Output terminals status display]**	**-**			

▪ Current output terminals (MO, relays) status (ON/Off) can be monitored in I26.

▸ For example: The followings are displayed when Multi-function output terminal (MO) is ON with Multi-function relay OFF.

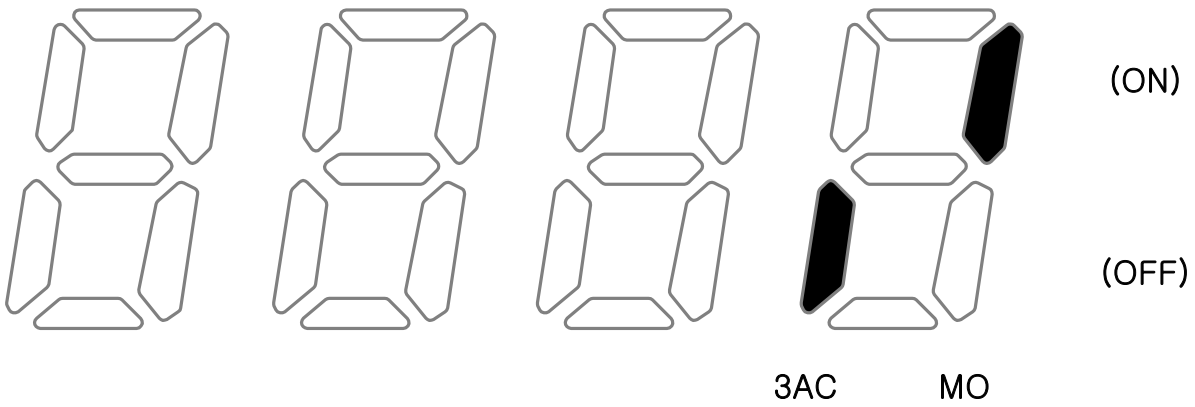

11.3 Monitoring fault condition

- Monitoring current fault status

Group	Display	Parameter Name	Setting	Range	Default	Unit
Drive group	**nOn**	**[Current Fault Display]**	**-**			

- Fault occurred during operation is displayed in nOn.
- Up to 3 kinds of faults can be monitored.

▸ This parameter gives information on fault types and the operating status at the time of the fault.

Fault types	Frequency	30.00	
	Current	5.0	
	Accel/Decel Information	ACC	Fault during Accel
		dEC	Fault during Decel
		Std	Fault during constant run

▸ Refer to Page 190 on fault types.

- Fault History Monitoring

Group	Display	Parameter Name	Setting	Range	Default	Unit
Function group 2	H1	[Fault history 1]	-			
	~	~				
	H5	[Fault history 5]				
	H6	[Reset fault history]	-	0 ~ 1	0	

- H1 ~ H5: Up to 5 faults information are stored.
- H6: Previous fault information stored in the code H1 through H5 are all cleared setting “1” H6.

▸ When a fault occurs during operation, it can be monitored in **nOn**.

- When the fault condition is reset via the STOP/RST key or multi-function terminal, information displayed in **nOn** will be moved to H1. Moreover, the previous fault info stored in H1 will be automatically moved to H2. Therefore, the updated fault info, will be stored in the H1.

- When more than 1 fault occurred at the same time, up to 3 types of faults will be stored in one code.

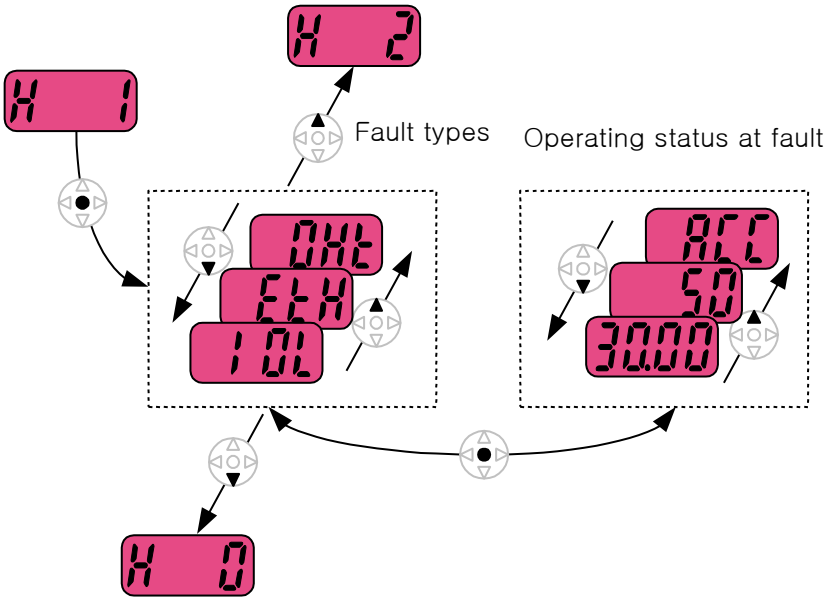

11.4 Analog Output

Group	Display	Parameter Name	Setting	Range	Default	Unit
I/O group	**I50**	**[Analog output item select]**	**-**	0 ~ 3	0	
	I51	[Analog output level adjustment]	-	10 ~ 200	100	%

- Output item and the level from the AM terminal are selectable and adjustable.

▸ I50: The selected item will be output on the Analog output terminal (AM).

I50	Analog output item select			Item corresponding to 10V	
				200V	400V
		0	Output frequency.	Max Frequency (F21)	
		1	Output current	150% of Inverter rated current	
		2	Output voltage	282Vac	564Vac
		3	Inverter DC link voltage	400Vdc	800Vdc

▸ I51: If you want to use Analog output value as an input signal for instruments, the value can be adjustable according to instruments specifications.

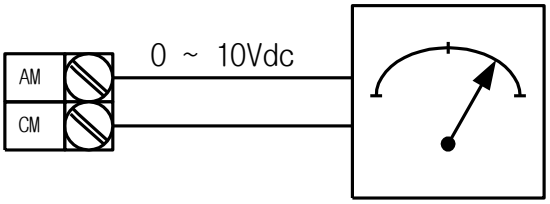

11.5 Multi-function output terminal (MO) and Relay (3AC)

Group	Code	Parameter	Setting range				Initial
I/O group	I54	[Multi-function output terminal select]	0	FDT-1			12
			1	FDT-2			
	I55	[Multi-function relay select]	2	FDT-3			17
			3	FDT-4			
			4	FDT-5			
			5	Overload {OLt}			
			6	Inverter Overload {IOLt}			
			7	Motor stall {STALL}			
			8	Over voltage trip {OV}			
			9	Low voltage trip {LV}			
			10	Inverter overheat {OH}			
			11	Command loss			
			12	During run			
			13	During stop			
			14	During constant run			
			15	During speed searching			
			16	Wait time for run signal input			
			17	Fault output			
			18	Cooling fan trip alarm			
	I56	[Fault relay output]		When setting the H26–[Number of auto restart]	When a trip, different than low voltage occurs	When low voltage trip occurs	
				Bit 2	Bit 1	Bit 0	
			0	-	-	-	2
			1	-	-	✓	
			2	-	✓	-	
			3	-	✓	✓	
			4	✓	-	-	
			5	✓	-	✓	
			6	✓	✓	-	
			7	✓	✓	✓	

- Select the desired item to be output via MO terminal and relay (3AC).

- I56: When 17 {Fault output} is selected in I54 and I55, Multi-function output terminal and relay will be activated with the value in I56.

- 0: FDT-1
  - Check whether the output frequency matches the user-setting frequency.
  - Active condition: Absolute value (preset frequency - output frequency) ≤ Frequency Detection Bandwidth/2

Group	Display	Parameter Name	Setting	Range	Default	Unit
I/O group	**I53**	**[Detected Frequency Bandwidth]**	**-**	0 ~ 400	10.00	Hz

- Cannot be set above Max frequency (F21).

  - When setting I53 to 10.0

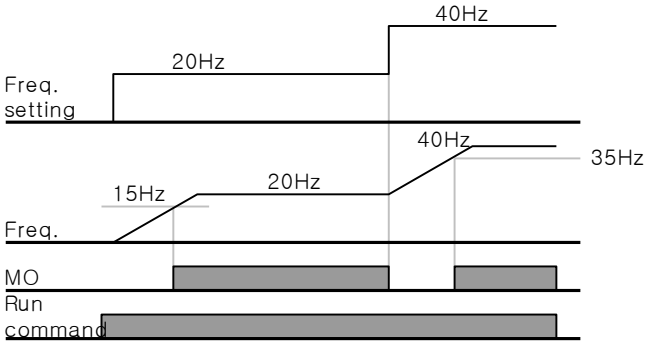

- 1: FDT-2
  - Activated when the preset frequency matches frequency detection level (I52) and FDT-1 condition is met.
  - Active condition: (Preset frequency = FDT level) & FDT-1

Group	Display	Parameter Name	Setting	Range	Default	Unit
I/O group	**I52**	**[Detected Frequency level]**	**-**	0 ~ 400	30.00	Hz
	I53	**[Detected Frequency Bandwidth]**	**-**		10.00	

- Cannot be set above Max frequency (F21).

  - When setting I52 and I53 to 30.0 Hz and 10.0 Hz, respectively

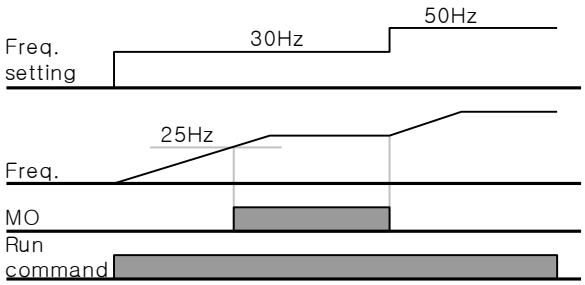

- 2: FDT-3
  - Activated when run frequency meets the following condition.
  - Active condition: Absolute value (FDT level - run frequency) ≤ FDT Bandwidth/2

Group	Display	Parameter Name	Setting	Range	Default	Unit
I/O group	I52	[Detected Frequency level]	-	0 ~ 400	30.00	Hz
	I53	[Detected Frequency Bandwidth]	-		10.00	

- Cannot be set above Max frequency (F21).

- When setting I52 and I53 to 30.0Hz and 10.0 Hz, respectively

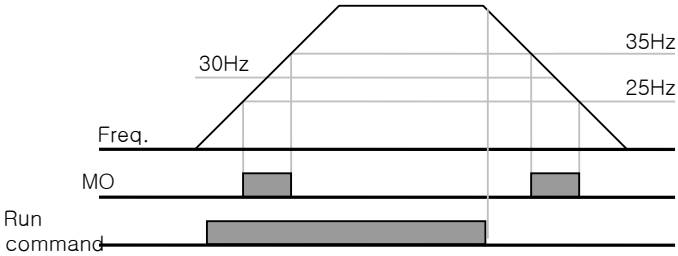

- 3: FDT-4
  - Activated when run frequency meets the following condition.

    Active condition:

    Accel time: Run Frequency ≥ FDT Level

    Decel time: Run Frequency > (FDT Level – FDT Bandwidth/2)

Group	Display	Parameter Name	Setting	Range	Default	Unit
I/O group	I52	[Detected Frequency level]	-	0 ~ 400	30.00	Hz
	I53	[Detected Frequency Bandwidth]	-		10.00	

- Cannot be set above Max frequency (F21).

- When setting I52 and I53 to 30.0Hz and 10.0 Hz, respectively

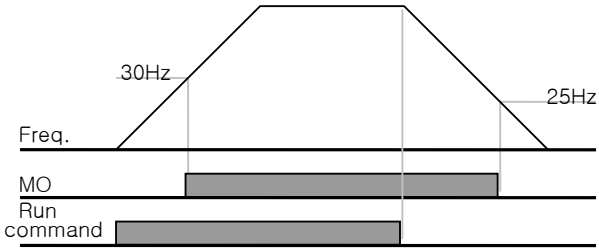

- 4: FDT-5
  - Activated as B contact contrast to FDT-4.

  Active condition:

  Accel time: Run Frequency ≥ FDT Level

  Decel time: Run Frequency > (FDT Level – FDT Bandwidth/2)

Group	Display	Parameter Name	Setting	Range	Default	Unit
I/O group	**I52**	**[Detected Frequency level]**	**-**	0 ~ 400	30.00	Hz
	I53	**[Detected Frequency Bandwidth]**	**-**		10.00	

- Cannot be set above Max frequency (F21).

  - When setting I52 and I53 to 30.0Hz and 10.0 Hz, respectively

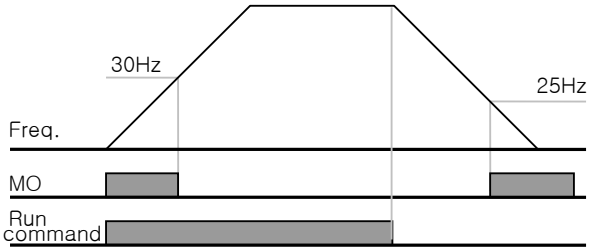

- 5: Overload (OLt)
  - Refer to page 164.
- 6: Inverter Overload (IOLt)
  - Refer to page 168.
- 7: Motor stall (STALL)
  - Refer to page 165.
- 8: Over voltage trip (Ovt)
  - Activated when over voltage trip occurs due to DC link voltage exceeded 400Vdc for 2S/T class and 820Vdc for 4T class.
- 9: Low voltage trip (Lvt)
  - Activated when low voltage trip occurs due to DC link voltage under 180Vdc for 2S/T class and 360Vdc for 4T class.
- 10: Inverter heatsink overheat (OHt)
  - Activated when the heatsink is overheated.
- 11: Command loss
  - Activated when Analog (V1,I) and RS485 communication commands are lost.

- 12: During operation
  - Activated when run command is ON and inverter output voltage is different from 0.

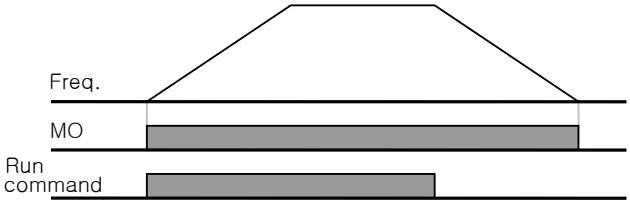

- 13: During stop
  - Activated during stop without output voltage/frequency.

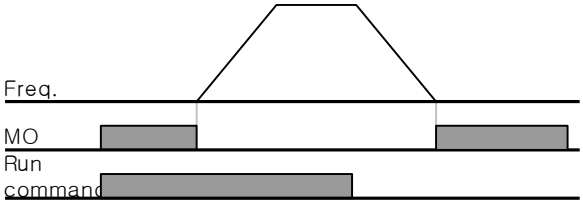

- 14: During constant speed
  - Activated during constant speed operation.

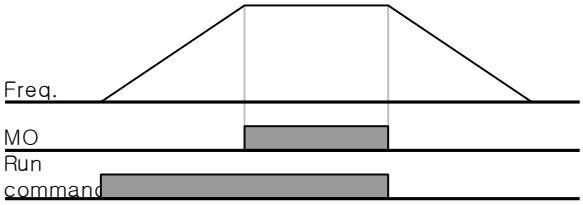

- 15: During speed searching
  - Refer to page 111.

- 16: Wait time for run signal input
  - This function becomes active during normal operation and that the inverter waits for active run command from external sequence.

- 17: Fault output
  - The parameter set in I56 is activated.
  - For example, if setting I55, I56 to 17 and 2, respectively, Multi-function output relay will become active when trip different from “Low voltage trip” occurred.

- 18: Cooling fan trip alarm
  - Used to give an alarm signal when H78 is set to 0 (constant operation at cooling fan trip). Refer to page 119.

11.5.1 A, B Contact selection

LED display	Parameter name	Setting range	Description	Factory defaults	Adj. During run
I91	A, B Contact selection	0	A Contact (Normal open)	0	O
		1	B Contact (Normal Close)		

- This function code is for selecting the Contact type of multifunction transistor Digital output MO. MO contact type is A contact (normally open) when setting value is “0”, and B contact (normally closed) when setting value is “1”.
- Multifunction relay digital output 3 A,B,C does not need this function, because this relay has already both A, B Contacts.

11.5.2 A, B Contact On/Off delay

LED display	Parameter name	Setting range	Description	Factory defaults	Adj. During Run
I92	MO On delay	0.0~10.0 sec	MO contact On delay time	0.0 sec	X
I93	MO Off delay	0.0~10.0 sec	MO contact Off delay time	0.0 sec	X
I94	30A,B,C On delay	0.0~10.0 sec	30 A,B,C contact On delay time	0.0 sec	X
I95	30A,B,C Off delay	0.0~10.0 sec	30 A,B,C contact Off delay time	0.0 sec	X

- These codes are for On, off delay time of multi functional transistor Digital output MO and Relay Digital output 3 A,B,C.
- If the operation time of the contact is shorter than the delay time, operation is as shown below.

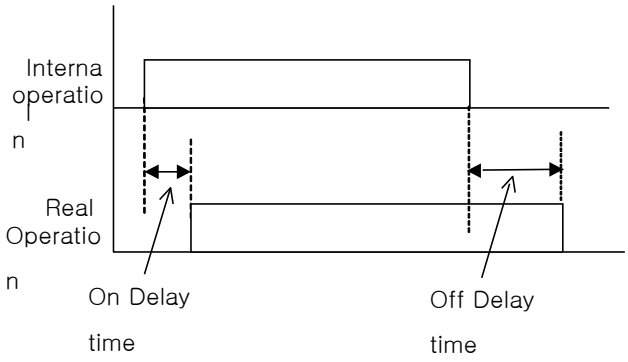

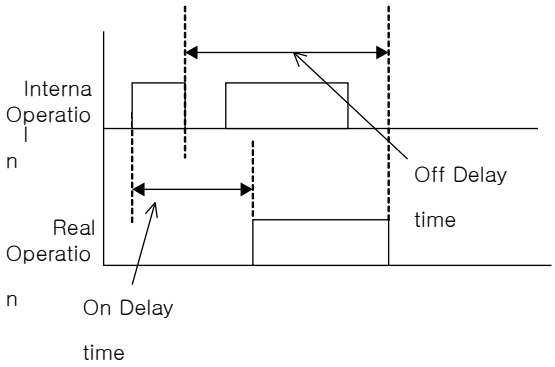

11.6 Output terminal select at keypad-inverter communication error

Group	Display	Parameter Name	Setting	Range	Default	Unit
I/O group	**I57**	**[Output terminal select when communication error with keypad]**	**-**	0 ~ 3	0	

- Select relay output or open collector output when keypad-inverter communication fails.

▸ Keypad and inverter CPU communication is made by serial communication. When communication error occurs for a certain time, Err will be displayed and error signal can be output to MO or relay.

	Output relay	Output terminal
	Bit 1	Bit 0
0	-	-
1	-	✓
2	✓	-
3	✓	✓

▸ 0: Not used
▸ 1: Signal output to MO
▸ 2: Signal output to 30A, 30B contacts
▸ 3: Signal output to MO, 30A, 30B

CHAPTER 12 - PROTECTIVE FUNCTIONS

12.1 Electronic Thermal Protection

Group	Code	Parameter	Set	Range	Initial	Unit
Function group 1	**F50**	**[ETH (Electronic thermal) select]**	**1**	0 ~ 1	0	
	F51	[Electronic thermal level for 1 minute]	-	50 ~ 200	150	%
	F52	[Electronic thermal level for continuous]	-		100	%
	F53	[Motor type]	-	0 ~ 1	0	

- Select F50 – [Electronic thermal select] to 1.
- It activates when the motor is overheated. If current greater than set in F51 flows, inverter output is turned off for the preset time in F51- [Electronic thermal level for 1 minute].

- F51: Enter the value of max current that is capable of flowing to the motor continuously for one minute. It is set in percent of motor rated current. The value cannot be set lower than F52.

- F52: Enter the amount of current for continuous operation. Normally motor rated current is used. It cannot be set greater than F51.

- F53: For a standard fan cooled motor, cooling effects decrease when a motor is running at low speed. A forced cooled motor is a motor that uses a separately powered cooling fan maximize cooling effect even in low speed.

F53	[Motor type]	0	Standard fan cooled motors having a cooling fan directly connected to the shaft
		1	Forced cooled motor that uses a separately powered cooling fan.

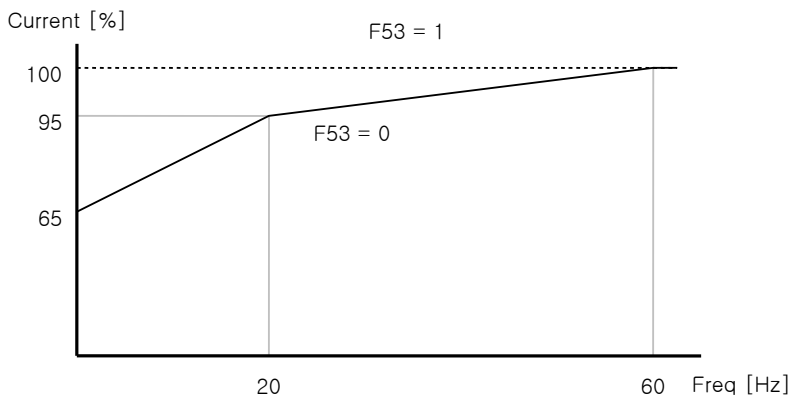

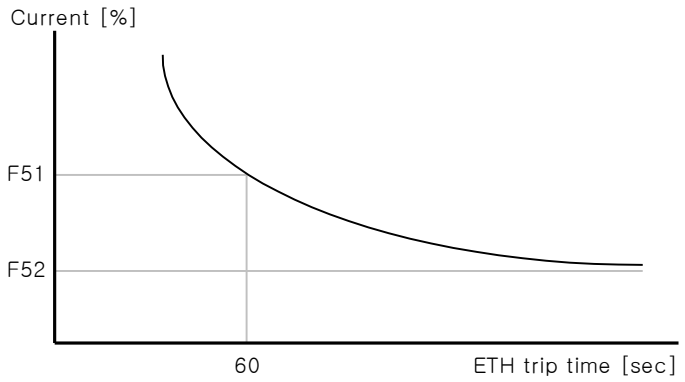

12.2 Overload Warning and trip

- Overload warning

Group	Code	Parameter	Set	Range	Initial	Unit
Function group 1	**F54**	**[Overload warning level]**	**-**	30 ~ 150	150	%
	F55	**[Overload warning time]**	**-**	0 ~ 30	10	Sec
I/O group	**I54**	**[Multi-function output terminal select]**	**5**	0 ~ 18	12	
	I55	[Multi-function relay select]	5		17	

- Select one output terminal for this function between MO and 3ABC.
- If selecting MO as output terminal, set I54 to 5 {Overload: OL}.

▸ F54: Set the value as a percent of motor rated current.

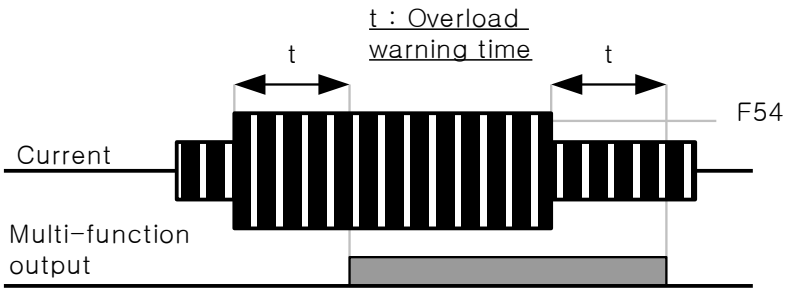

- Overload trip

Group	Code	Parameter	Set	Range	Initial	Unit
Function group 1	**F56**	**[Overload trip select]**	**1**	0 ~ 1	1	
	F57	[Overload trip level]	-	30 ~ 200	180	%
	F58	[Overload trip time]	-	0 ~ 60	60	sec

- Set F56 to 1.
- Inverter output is turned off when motor is overloaded.
- Inverter output is turned off when excessive current flows to the motor for F58 – [Overload trip time].

12.3 Stall prevention

Group	Code	Parameter	Set	Range	Initial	Unit
Function group 1	**F59**	**[Stall prevention select]**	**-**	0 ~ 7	0	
	F60	**[Stall prevention level]**	**-**	30 ~ 200	150	%
I/O group	I54	[Multi-function output terminal select]	7	0 ~18	12	
	I55	[Multi-function relay select]	7		17	

- During acceleration: Motor acceleration ramp is stopped when current exceeds the value set in F60.
- During constant run: Motor decelerates when current exceeds the value set in F60.
- During deceleration: Motor deceleration ramp is stopped when inverter DC link voltage rises above a certain voltage level.
- F60: The value is set as the percent of motor rated current (H33).
- I54, I55: Inverter outputs signals through multi-function output terminal (MO) or relay output (3ABC) or external sequence when stall prevention function is activated. Motor stall status can be monitored setting F59 different from (000).

▸ F59: Stall prevention can be set as the table below.

F59	Stall prevention	Setting	During Deceleration	During constant speed	During Acceleration
			Bit 2	Bit 1	Bit 0
		0	-	-	-
		1	-	-	✓
		2	-	✓	-
		3	-	✓	✓
		4	✓	-	-
		5	✓	-	✓
		6	✓	✓	-
		7	✓	✓	✓

- For example, set F59 to 3 to make stall prevention active during Acceleration and constant run.

- When stall prevention is executed during acceleration or deceleration, Accel/Decel time may take longer than the user-setting time.

- When stall prevention is activated during constant run, t1, t2 are executed in accordance with the value set in ACC - [Accel time] and dEC - [Decel time].

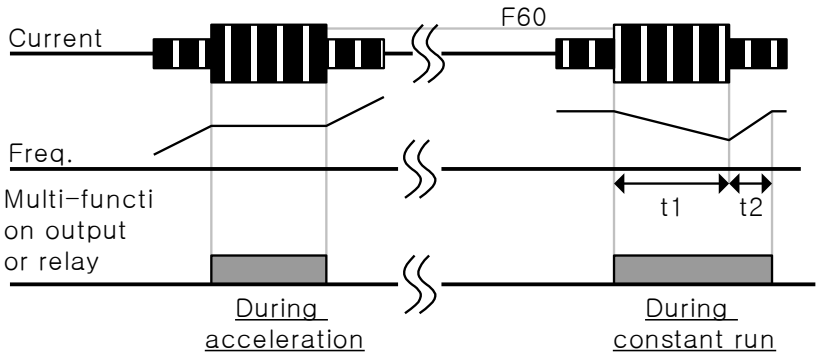

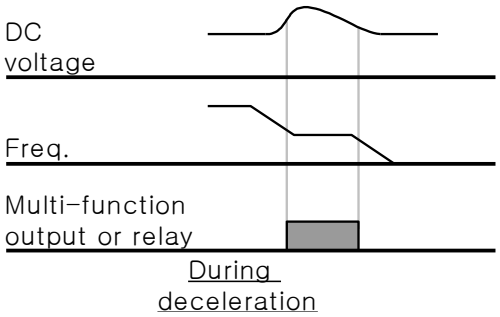

12.4 Input/Output phase loss protection

Group	Code	Parameter	Set	Range	Initial	Unit
Function group 2	**H19**	**[Input/Output phase loss protection select]**	**1**	0 ~ 3	0	

- Set H19 value to 1
- Output phase loss: Inverter output is shut off at the event of one or more output phase loss among U, V and W.
- Set H19 value to 2
- Input phase loss: Inverter output is shut off at the event of one or more input phase loss among R, S and T. If there is no input phase loss, output is shut off when it is time to replace DC link capacitor.
- Set H19 value to 3
- Input/output phase loss: Inverter output is shut off at the event of one or more input or output phases loss among R, S and T or U, V and W If there is no input or output phase loss, output is shut off when it is time to replace DC link capacitor.

> ⚠ **Caution:**
> Set H33- [Motor rated current] correctly. If the actual motor rated current and the value of H33 are different, output phase loss protection function could not be activated.

H19	[Input/Output phase loss protection select]	Both bars down	Not used
		Right hand (low bit) UP	Output phase loss protection
		Left hand (high bit) UP	Input phase loss protection
		Both bars UP	Input/output phase loss protection

12.5 External trip signal

Group	Code	Parameter	Set	Range	Initial	Unit
I/O group	I17	[Multi-function input terminal P1 define]		0 ~ 29	0	
	~	~				
	I23	**[Multi-function input terminal P7 define]**	**18**		6	
	I24	**[Multi-function input terminal P8 define]**	**19**		7	

- Select a terminal among P1 and P8 to output external trip signal.
- Set I23 and I24 to 18 and 19 to define P7 and P8 as External A contact and B contact.

- External trip signal input A contact (N.O.): Normal open contact input. When a P7 terminal set to "Ext trip-A" is ON (Closed), inverter displays the fault and turns off its output.
- External trip signal input B contact (N.C.): Normal close contact input. When a P8 terminal set to "Ext trip-B" is OFF (Open), inverter displays the fault and turns off its output.

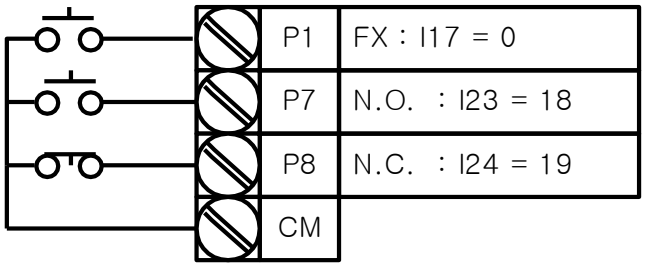

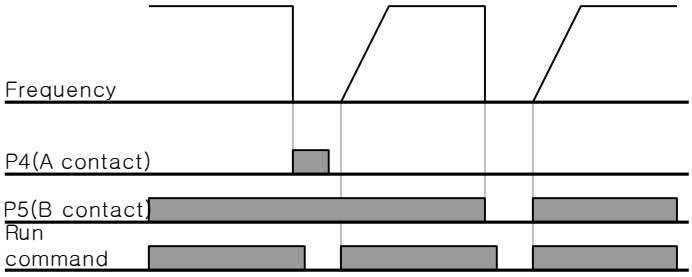

12.6 Inverter Overload

Group	Code	Parameter	Set	Range	Initial	Unit
I/O group	I54	[Multi-function output terminal select]	6	0 ~ 18	12	
	I55	[Multi-function relay select]	6		17	

- Inverter overload prevention function is activated when the current is above inverter rated current.
- Multi-function output terminal (MO) or Multi-function relay (3ABC) is used as the alarm signal output during inverter overload trip.

12.7 Frequency command loss

Group	Code	Parameter	Set	Range	Initial	Unit
I/O group	**I16**	**[Criteria for analog input signal loss]**	**0**	0 ~ 2	0	
	I62	**[Drive mode select after loss of frequency command]**	**-**	0 ~ 2	0	
	I63	**[Wait time after loss of frequency command]**	**-**	0.1 ~ 120	1.0	sec
	I54	[Multi-function output terminal select]	11	0 ~ 18	12	
	I55	[Multi-function relay select]	11		17	

- Select the Drive mode when frequency reference set via Analog (V1, I) input terminal or communication option is lost.

- I16: This is to set the criteria for analog input signal loss.

I16	[Criteria for analog input signal loss]	0	Disabled (Does not check the analog input signal loss)
		1	When half the value set in I2, I7, I12 is entered
		2	When less than the value set in I2, I7, I12 is entered

Ex 1) The inverter determines the freq reference is lost when DRV- Frq is set to 3 (Analog V1 input), I16 to 1 and analog input signal is less than half the value set in I7.

Ex 2) The inverter determines the freq reference is lost when DRV- Frq is set to 6 (V1+I), I16 to 2 and V1 input signal is either below the value set in I7 or I input value is less than the I12 value.

- I62: When no frequency command is given for the time set in I63, set the drive mode as the table below.

I62	[Drive mode select after loss of frequency command]	0	Continuous operation with the frequency before command loss occurs
		1	Free run stop (Coast to stop)
		2	Deceleration ramp to stop

- I54, I55: Multi-function output terminal (MO) or Multi-function relay output (3ABC) is used to output information on loss of frequency command to external sequence.

Ex) when I16 is set to 2, I62 to 2, I63 to 5.0 sec and I54 to 11, respectively,

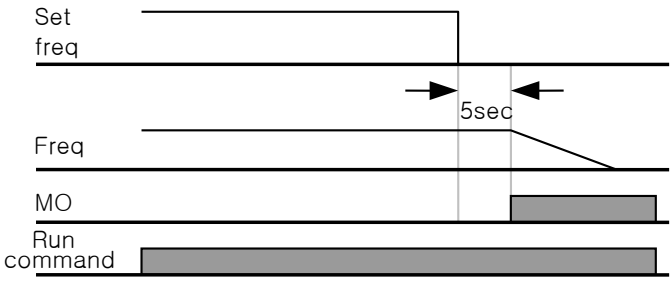

12.8 DB Resistor Enable Duty setting

Group	Code	Parameter	Set	Range	Initial	Unit
Function group 2	**H75**	**[Enable duty limit]**	**1**	0 ~ 1	1	
	H76	[Enable duty]	-	0 ~ 30	10	%

- Set H75 to 1.
- Set %ED (Enable Duty) in H76.

▸ H75: DB resistor ED limit setting

0	No limit
	⚠ **Caution:** Take caution when DB resistor is used over its Watt rating. Fire may result from resistor overheat. When resistor having heat detection sensor is used, sensor output can be used as external trip signal in multi-function input.
1	ED is limited as the setting in H76.

▸ H76: set the resistor operating rate (%ED) in one sequence of operation. Continuous usage rate is Max 15 sec and usage signal is not issued over 15 sec.

Ex 1) $$H76 = \frac{T_dec}{T_acc + T_steady + T_dec + T_stop} \times 100[\%]$$

Where: T_acc: Acceleration time to reach the set freq.

T_steady: Time for constant speed operation at setting freq.

T_dec: Time to decelerate to lower frequency set.

T_stop: waiting time at motor stopped before operation again.

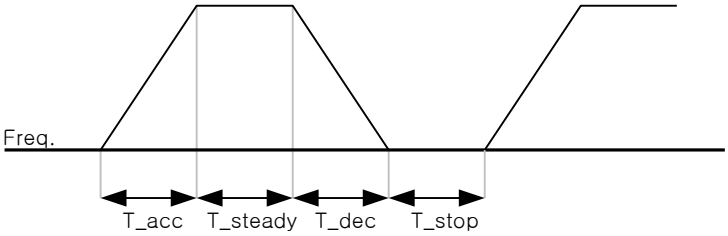

Ex 2) $$H76 = \frac{T_dec}{T_dec + T_steady1 + T_acc + T_steady2} \times 100[\%]$$

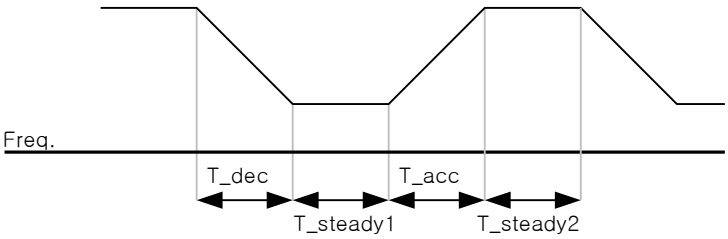

CHAPTER 13 - RS485 COMMUNICATION

13.1 Introduction

Inverter can be controlled and monitored by the sequence program of the PLC or other master module.

Drives or other slave devices may be connected in a multi-drop on the RS-485 network and can be monitored or controlled by a single PLC or PC. Parameter setting and change are available through PC.

13.1.1 Features

Inverter can be easily applied for factory automation because operation and monitoring is available by User-program.

* Parameter change and monitoring is available via computer.
  (Ex: Accel/Decel time, Freq. Command etc.)
* Interface type of RS485 reference:

1) Allows the drive to communicate with any other computers.
2) Allows connection up to 31 drives with multi-drop link system.
3) Electrical noises protected .

Users can use any kind of RS232-485 converters. The specifications of converters depend on the manufacturers. Refer to the converter manual for detailed specifications.

13.1.2 Before installation

Before installation and operation, this manual should be read carefully. If not, it can cause personal injury or damage to other equipment.

13.2 Specification

13.2.1 Performance specification

Item	Specification
Communication method	RS485
Transmission form	Bus method, Multi drop Link System
Applicable inverter	Sinus M series
Converter	RS232 converter
Connectable drives	Max. 31 drives
Transmission distance	Max. 1,200m (Within 700m Recommend)

13.2.2 Hardware specification

Item	Specification
Installation	Use S+, S- terminals on control terminal board
Power supply	Use Insulated power from the inverter power supply

13.2.3 Communication specification

Item	Specification
Communication speed	19,200/9,600/4,800/2,400/1,200 bps selectable
Control procedure	Asynchronous communication system
Communication system	Half duplex system
Character system	ASCII (8 bit)
Stop bit length	Modbus-RTU: 2 bit ES Bus: 1 bit
Sum check	2 byte
Parity check	None

13.3 Installation

13.3.1 Connecting the communication line

Connect the RS485 communication line to the inverter's (S+), (S-) terminals of the control terminals. Check the connection and switch the inverter ON.
If the communication line is connected correctly, set the communication-related parameters as following:

- DRV-03 [Drive mode]: 3(RS485)
- DRV-04 [Freq. mode]: 7(RS485)
- I/O-60 [Inv. Number]: 1~250 (If more than 1 inverters are connected, be sure to use different numbers for each inverter)
- I/O-61 [Baud-rate]: 3 (9,600 bps as Factory default)
- I/O-62 [Lost Mode]: 0 - No action (Factory default)
- I/O-63 [Time-Out]: 1.0 sec (Factory default)
- I/O-59 [Comm. Prot]: 0 - Modbus-RTU, 1 – ES BUS

13.3.2 Computer and inverter connection

System configuration

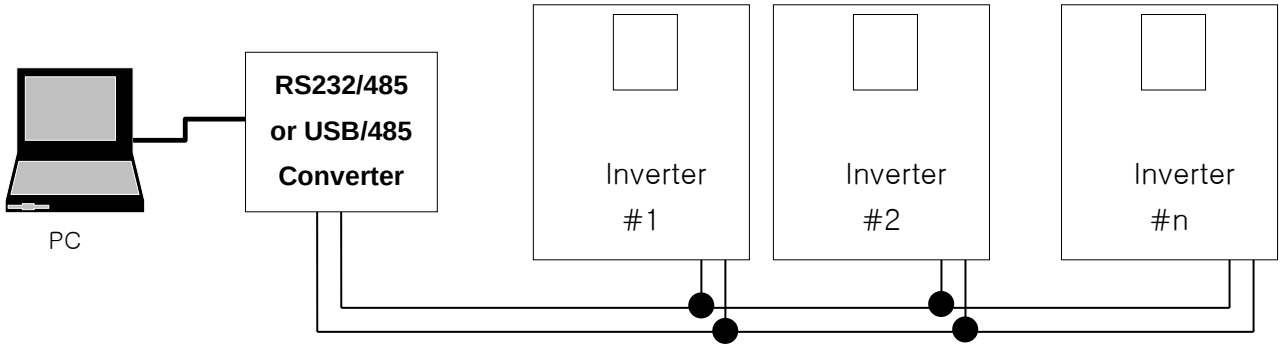

- The number of drives to be connected is up to 31 drives.
- The specification of length of communication line is max. 1200m. To ensure stable communication, is suggested to limit the length below 700m.

13.4 Operation

13.4.1 Operating steps

- Check whether the computer and the inverter are connected correctly.
- Switch the inverter ON. Do not connect the load until stable communication between the computer and the inverter is verified.
- Start the operating program for the inverter from the computer.
- Operate the inverter using the operating program for the inverter.
- Refer to “13.8 Troubleshooting” if the communication is not operating normally.

*User program or the “REMOTE DRIVE” program supplied from ES can be used as the operating program for the inverter.

13.5 Communication protocol (MODBUS-RTU)

Use Modbus-RTU protocol (Open protocol).

Computer or other hosts can be Master and inverters Slaves. Inverter responds to Read/Write command from Master.

Supported function code

Function code	Description
0x03	Read Hold Register
0x04	Read Input Register
0x06	Preset Single Register
0x10	Preset Multiple Register

Exception code

Function code		Description
0x01		ILLEGAL FUNCTION
0x02		ILLEGAL DATA ADDRESS
0x03		ILLEGAL DATA VALUE
0x06		SLAVE DEVICE BUSY
User define	0x14	1.Write Disable (Address 0x0003 value is 0). 2.Read Only or Not Program during Running.

13.6 Communication protocol (ES BUS)

13.6.1 Basic format

Command message (Request):

ENQ	Drive No.	CMD	Data	SUM	EOT
1 byte	2 bytes	1 byte	n bytes	2 bytes	1 byte

Normal response (Acknowledge Response):

ACK	Drive No.	CMD	Data	SUM	EOT
1 byte	2 bytes	1 byte	n * 4 bytes	2 bytes	1 byte

Negative response (Negative Acknowledge Response):

NAK	Drive No.	CMD	Error code	SUM	EOT
1 byte	2 bytes	1 byte	2 bytes	2 bytes	1 byte

Description:

Request starts with “ENQ” and ends with “EOT”.

Acknowledge Response starts with “ACK” and ends with “EOT”.

Negative Acknowledge Response starts with ”NAK” and ends with “EOT”.

“Drive Number” is the number of drives and indicated in 2 bytes ASCII-HEX.

(ASCII-HEX: Hexadecimal consists of ‘0’ ~ ‘9’, ‘A’ ~ ‘F)

CMD: Capital letter

Character	ASCII-HEX	Command
'R'	52h	Read
'W'	57h	Write
'X'	58h	Request for monitoring
'Y'	59h	Action for monitoring

Data: ASCII-HEX

Ex) when data value is 3000: 3000 (dec) → '0' 'B' 'B' '8'h → 30h 42h 42h 38h

Error code: ASCII (20h ~ 7Fh)

Receive/Send buffer size: Receive= 39 bytes, Send=44 bytes

Monitor register buffer: 8 Word

SUM: to check the communication error

SUM= ASCII-HEX format of lower 8 bit of (Drive No. + CMD + DATA)

Ex) Command Message (Request) for reading one address from address "3000"

ENQ	Drive No	CMD	Address	Number of address to read	SUM	EOT
05h	"01"	"R"	"3000"	"1"	"A7"	04h
1 byte	2 bytes	1 byte	4 bytes	1 byte	2 bytes	1 byte

SUM = '0' + '1' + 'R' + '3' + '0' + '0' + '0' + '1'

= 30h + 31h + 52h + 33h + 30h + 30h + 30h + 31h

= 1A7h (Control values such as ENQ/ACK/NAK are excluded.)

13.6.2 Detail communication protocol

1) Request for Read: Request for read successive 'N' numbers of WORD from address "XXXX"

ENQ	Drive No	CMD	Address	Number of address to read	SUM	EOT
05h	"01" ~ "1F"	"R"	"XXXX"	"1" ~ "8" = n	"XX"	04h
1 byte	2 bytes	1 byte	4 bytes	1 byte	2 bytes	1 byte

Total bytes = 12

The quotation marks (" ") mean a character.

1.1) Acknowledge Response:

ACK	Drive No	CMD	Data	SUM	EOT
06h	"01" ~ "1F"	"R"	"XXXX"	"XX"	04h
1 byte	2 bytes	1 byte	N * 4 bytes	2 byte	1 byte

Total bytes = 7 + n * 4 = Max 39

1.2) Negative Acknowledge Response:

NAK	Drive No	CMD	Error code	SUM	EOT
15h	"01" ~ "1F"	"R"	"**"	"XX"	04h
1 byte	2 bytes	1 byte	2 bytes	2 bytes	1 byte

Total bytes = 9

2) Request for Write:

ENQ	Drive No	CMD	Address	Number of address to read	Data	SUM	EOT
05h	“01”~ “1F”	“W”	“XXXX”	“1” ~ “8” = n	“XXXX…”	“XX”	04h
1 byte	2 bytes	1 byte	4 bytes	1 byte	n * 4 bytes	2 byte	1 byte

Total bytes = 12 + n * 4 = Max 44

2.1) Acknowledge response:

ACK	Drive No	CMD	Data	SUM	EOT
06h	“01” ~ “1F”	“W”	“XXXX…”	“XX”	04h
1:byte	2:bytes	1:byte	n * 4 bytes	2 bytes	1 byte

Total bytes = 7 + n * 4 = Max 39

Note) When Request for Write and Acknowledge Response is exchanged between PC and Inverter for the first time, previous data is returned. From the second time of transmission, the current data will be returned.

2.2) Negative response:

NAK	Drive No	CMD	Error code	SUM	EOT
15h	“01” ~ “1F”	“W”	“**”	“XX”	04h
1 byte	2 bytes	1 byte	2 bytes	2 bytes	1 byte

Total bytes = 9

3) Request for Monitor Register

This is useful when constant parameter monitoring and data updates are required.

Request for Register of ‘n’ numbers of Address (not consecutive)

ENQ	Drive No	CMD	Number of address to read	Address	SUM	EOT
05h	“01” ~ “1F”	“X”	“1” ~ “8”=n	“XXXX…”	“XX”	04h
1 byte	2 bytes	1 byte	1 byte	n * 4 byte	2 byte	1 byte

Total bytes = 8 + n * 4 = Max 40

3.1) Acknowledge Response:

ACK	Drive No	CMD	SUM	EOT
06h	“01” ~ “1F”	“X”	“XX”	04h
1 byte	2 bytes	1 byte	2 bytes	1 byte

Total bytes = 7

3.2) Negative Acknowledge Response:

NAK	Drive No	CMD	Error code	SUM	EOT
15h	“01” ~ “1F”	“X”	“**”	“XX”	04h
1 byte	2 bytes	1 byte	2 bytes	2 bytes	1 byte

Total bytes = 9

4) Action Request for monitor register: Request for read of address registered by monitor register.

ENQ	Drive No	CMD	SUM	EOT
05h	“01” ~ “1F”	“Y”	“XX”	04h
1 byte	2 bytes	1 byte	2 bytes	1 byte

Total bytes = 7

4.1) Acknowledge response:

ACK	Drive No	CMD	Data	SUM	EOT
06h	“01” ~ “1F”	“Y”	“XXXX…”	“XX”	04h
1 byte	2 bytes	1 byte	n * 4 bytes	2 bytes	1 byte

Total bytes = 7 + n * 4 = Max 39

4.2) Negative response:

NAK	Drive No	CMD	Error code	SUM	EOT
15h	“01” ~ “1F”	“Y”	“**”	“XX”	04h
1 byte	2 bytes	1 byte	2 bytes	2 bytes	1 byte

Total bytes = 9

5) Error code

Error code	Description
“IF”	When master is sending codes other than Function code (R, W, X, Y).
“IA”	When parameter address does not exist
“ID”	When Data value exceeds its permissible range during ‘W’ (Write).
“WM”	When the specific parameters cannot be written during ‘W’ (Write). (For example, in the case of Read Only, Write disabled during Run)
“FE”	When frame size of specific function is not correct and Checksum field is wrong.

13.7 Parameter code list <Common area>

<Common area>: Accessible area regardless of inverter models (Note 1)

Address	Parameter	Scale	Unit	R/W	Data value
0x0000	Inverter capacity			R	FFFF: 0.4kW 0000: 0.75kW 0001: n.u. 0002: 1.5kW 0003: 2.2kW 0004: 3.7kW 0005: 4.0kW 0006: 5.5kW 0007: 7.5kW 0008: 11.0kW 0009: 15.0kW 000A: 18.0kW 000B: 22.0kW
0x0001	Inverter Input Voltage			R	0: 2S/T class 1: 4T class
0x0002	S/W Version			R	0x0023: Version EU2.3 (Note 2)
0x0003	Parameter Lock			R	0: Lock (default) 1: Unlock
0x0004	Frequency Reference	0.01	Hz	R	Starting freq. ~ Max. freq.
0x0005	Run Command			R/W	BIT 0: Stop (0→1) BIT 1: Forward run (0→1) BIT 2: Reverse run (0→1)
				W	BIT 3: Fault reset (0→1) BIT 4: Emergency stop (0→1)
				-	BIT 5, BIT 15: Not used
				R	BIT 6~7: Output freq. arrival 0 (Terminal), 1 (keypad) 2 (Reserved), 3 (communication) BIT 8~12: Freq. command 0: DRV–00, 1: Not used, 2~8: Multi-Step frequency 1~7 9: Up, 10: Down, 11: UDZero, 12: V0, 13: V1, 14: I, 15: V0+I, 16: V1+I, 17: Jog, 18: PID, 19: Communication, 20 ~ 31: Reserved
0x0006	Acceleration Time	0.1	sec	R/W	See Function List.
0x0007	Deceleration Time	0.1	sec	R/W	
0x0008	Output Current	0.1	A	R	
0x0009	Output Frequency	0.01	Hz	R	
0x000A	Output Voltage	0.1	V	R	
0x000B	DC Link voltage	0.1	V	R	
0x000C	Output power	0.1	kW	R	

Address	Parameter	Scale	Unit	R/W	Data value
0x000D	Inverter status			R	BIT 0: Stop BIT 1: Forward running BIT 2: Reverse running BIT 3: Fault (Trip) BIT 4: Accelerating BIT 5: Decelerating BIT 6: Speed arrival BIT 7: DC Braking BIT 8: Stopping BIT 9: not Used BIT10: Brake Open BIT11: Forward run command BIT12: Reverse run command BIT13: REM. R/S BIT14: REM. Freq.
0x000E	Trip information			R	BIT 0: OCT BIT 1: OVT BIT 2: EXT-A BIT 3: EST (BX) BIT 4: COL BIT 5: GFT (Ground Fault) BIT 6: OHT (Inverter overheat) BIT 7: ETH (Motor overheat) BIT 8: OLT (Overload trip) BIT 9: HW-Diag BIT10: EXT-B BIT11: EEP (Parameter Write Error) BIT12: FAN (Lock & Open Error) BIT13: PO (Phase Open) BIT14: IOLT BIT15: LVT
0x000F	Input terminal status			R	BIT 0: P1 BIT 1: P2 BIT 2: P3 BIT 3: P4 BIT 4: P5 BIT 5: P6 BIT 6: P7 BIT 7: P8

Address	Parameter	Scale	Unit	R/W	Data value
0x0010	Output terminal status			R	BIT 0~3: Not Used BIT 4: MO (Multi-Output with OC) BIT 5~6: Not Used BIT 7: 3ABC
0x0011	V1	0~3FF		R	Value corresponding to 0V ~ +10V
0x0012	V2	0~3FF		R	Value corresponding to 0V ~ –10V input when Setting FreqMode to 2
0x0013	I	0~3FF		R	Value corresponding to 0 ~ 20mA input
0x0014	RPM			R	See Function List.
0x0019	Unit display			R	Not Used
0x001A	Pole number			R	Not Used
0x001B	Custom Version			R	Not Used
0x001C	Trip information-B			R	BIT 0: COM (I/O Board Reset) BIT 1: FLTL BIT 2: NTC BIT 3: REEP BIT 4~15: Not Used
0x00FF ~ 0x0106	Read address register			R	0x00FF: 166 0x0100: 167 0x0101: 168 0x0102: 169 0x0103: 170 0x0104: 171 0x0105: 172 0x0106: 173
0x0107 ~ 0x010E	Write address register			W	0x0107: 174 0x0108: 175 0x0109: 176 0x010A: 177 0x010B: 178 0x010C: 179 0x010D: 180 0x010E: 181

Note 1) The changed value in Common area affects the current setting but returns to the previous setting when power is cycled or Inverter is reset. However, changing value is immediately reflected in other parameter groups even in the case of Reset or Power On/Off.

Note 2) S/W version of Common area is displayed in hexadecimal format, while that of parameter area (H79) is displayed in decimal format.

Address	Parameter No	Parameter Name	Default	Min	Max	Unit	Adj. during run	R/W	Comm
DRV GROUP									
A100	D1	ACC	5.0	0	6000.0	sec	O	W	O
A101	D2	DEC	10.0	0	6000.0	sec	O	W	O
A102	D3	DRV	1	0	3		X	W	O
A103	D4	FRQ	0	0	8		X	W	O
A104	D5	ST 1	10.00	0	400.00	Hz	O	W	O
A105	D6	ST 2	20.00	0	400.00	Hz	O	W	O
A106	D7	ST 3	30.00	0	400.00	Hz	O	W	O
A107	D8	CUR	0	0	1		O	R	O
A108	D9	RPM	0	0	1800		O	R	O
A109	D10	DCL	0	0	6553.5		O	R	O
A10A	D11	USR	0	0	1		O	R	O
A10B	D12	FLT	0	0	1		O	R	O
A10C	D13	DRC	0	0	1		O	W	O
A10D	D14	DRV2	1	0	3		X	W	O
A10E	D15	FRQ2	0	0	7		X	W	O
A10F	D16	FRQ3	0	0	7		X	W	O
A110	D17	PID Ref.	0	0	MaxFBKVal		O	W	O
A111	D18	PID FBK.	0	0	MaxFBKVal		O	R	O

FU1 GROUP									
A200	F1	Run Prohibit	0	0	2		X	W	O
A201	F2	ACC Pattern	0	0	1		X	W	O
A202	F3	DEC Pattern	0	0	1		X	W	O
A203	F4	Stop Method	0	0	3		X	W	O
A207	F8	DcBr freq	5.00	0	60.00	Hz	X	W	O
A208	F9	DcBlk time	0.10	0	60.00	sec	X	W	O
A209	F10	DcBr value	50	0	200	%	X	W	O
A20A	F11	DcBr time	0.10	0	60.0	sec	X	W	O
A20B	F12	DcSt value	50	0	200	%	X	W	O
A20C	F13	DcSt time	0	0	60.0	sec	X	W	O
A20D	F14	PreExTime	1	0	60.0	sec	X	W	O
A213	F20	Jog Freq	10.00	0	400.00	Hz	O	W	O
A214	F21	Max Freq	50.00	40.00	maxUPP	Hz	X	W	O
A215	F22	Base Freq	50.00	30.00	maxUPP	Hz	X	W	O
A216	F23	Start Freq	50	10	1000	Hz	X	W	O
A217	F24	Freq Limit	0	0	1		X	W	O
A218	F25	High Freq	50.00	0	400.00	Hz	X	W	O
A219	F26	Low Freq	0.50	0	highFreq	Hz	X	W	O
A21A	F27	Trq Boost	0	0	1		X	W	O
A21B	F28	Fwd Boost	2.0	0	15.0	%	X	W	O
A21C	F29	Rev Boost	2.0	0	15.0	%	X	W	O
A21D	F30	VF Pattern	0	0	2		X	W	O
A21E	F31	User Freq1	12.50	0	400.00	Hz	X	W	O

A21F	F32	User Volt 1	25	0	100	%	X	W	O
A220	F33	User Freq 2	25.00	0	400.00	Hz	X	W	O
A221	F34	User Volt 2	50	0	100	%	X	W	O
A222	F35	User Freq 3	37.50	0	400.00	Hz	X	W	O
A223	F36	User Volt 3	75	0	100	%	X	W	O
A224	F37	User Freq 4	50.00	0	400.00	Hz	X	W	O
A225	F38	User Volt 4	100	0	100	%	X	W	O
A226	F39	Volt Perc	100.0	40.0	110.0	%	X	W	O
A227	F40	Energy save	0	0	30	%	O	W	O
A231	F50	ETH select	1	0	1		O	W	O
A232	F51	ETH 1min	150	contPerc[0]	200	%	O	W	O
A233	F52	ETH cont	100	50	ethPerc[0]	%	O	W	O
A234	F53	Motor type	0	0	1		O	W	O
A235	F54	OL level	150	30	150	%	O	W	O
A236	F55	OL time	10.0	0	30.0	sec	O	W	O
A237	F56	OLT select	1	0	1		O	W	O
A238	F57	OLT level	180	30	200	%	O	W	O
A239	F58	OLT time	60.0	0	60.0	sec	O	W	O
A23A	F59	Stall prev.	0	0	7		X	W	O
A23B	F60	Stall level	150	30	200	%	X	W	O
A23C	F61	OutVolt Supp	0	0	1		X	W	O
A23D	F62	Input AC Vol	310	310	480	V	O	W	O
A23E	F63	UP/DN SAVE	0	0	1		X	W	O
A23F	F64	UP/DN FREQ	0	0	400.00	Hz	O	W	O
A240	F65	UP/DN Mode	0	0	2		X	W	O
A241	F66	UP/DN Step	0	0	400.00	Hz	X	W	O
A245	F70	Draw Mode	0	0	3		X	W	O
A246	F71	Draw Percent	0	0	100.0	%	O	W	O

FU2 GROUP									
A300	H1	Last Fault1	0	0	1		O	R	O
A301	H2	Last Fault2	0	0	1		O	R	O
A302	H3	Last Fault3	0	0	1		O	R	O
A303	H4	Last Fault4	0	0	1		O	R	O
A304	H5	Last Fault5	0	0	1		O	R	O
A305	H6	Fault Clear	0	0	1		O	W	O
A306	H7	Dwell freq	5.00	0	400.00	Hz	X	W	O
A307	H8	Dwell time	0.0	0	10.0	sec	X	W	O
A309	H10	Jump freq	0	0	1		X	W	O
A30A	H11	jump lo 1	10.00	0	jumpHiFreq[0]	Hz	X	W	O
A30B	H12	jump Hi 1	15.00	jumpLoFreq[0]	400.00	Hz	X	W	O
A30C	H13	jump lo 2	20.00	0	jumpHiFreq[1]	Hz	X	W	O
A30D	H14	jump Hi 2	25.00	jumpLoFreq[1]	400.00	Hz	X	W	O
A30E	H15	jump lo 3	30.00	0	jumpHiFreq[2]	Hz	X	W	O
A30F	H16	jump Hi 3	35.00	jumpLoFreq[2]	400.00	Hz	X	W	O
A310	H17	Curve Time	40	1	100	%	X	W	O
A311	H18	Curve Time1	40	1	100	%	X	W	O
A312	H19	Trip select	0	0	3		O	W	O
A313	H20	Power-on run	0	0	1		O	W	O

A314	H21	RST restart	0	0	1		O	W	O
A315	H22	Speed Search	0	0	15		X	W	O
A316	H23	SS Sup-Curr	100	80	200	%	O	W	O
A317	H24	SS P-gain	100	0	9999		O	W	O
A318	H25	SS I-gain	200	0	9999		O	W	O
A319	H26	Retry number	0	0	10		O	W	O
A31A	H27	Retry delay	1.0	0	60.0	sec	O	W	O
A31D	H30	Motor select	0	0	maxMotNum		X	W	O
A31E	H31	Pole number	4	2	12		X	W	O
A31F	H32	Rated-Slip	2.00	0	10.00	Hz	X	W	O
A320	H33	Rated-Curr	1.8	5	150.0	A	X	W	O
A321	H34	Noload-Curr	7	1	100.0	A	X	W	O
A322	H35	Motor Input	0	0	2		X	W	O
A323	H36	Efficiency	72	50	100	%	X	W	O
A324	H37	Inertia rate	0	0	2		X	W	O
A325	H39	Carrier freq	3.0	1.0	15.0	KHz	O	W	O
A327	H40	Control Mode	0	0	3		X	W	O
A328	H41	Auto Tune	0	0	1		X	W	O
A329	H42	Rs	2.500	0	28.000	Ω	X	W	O
A32B	H44	Lsigma	26.00	0	300.00	mH	X	W	O
A32C	H45	SL P-Gain	1000	0	32767		O	W	O
A32D	H46	SL I-Gain	100	0	32767		O	W	O
A32E	H47	TRQ Limit	180.0	100.0	220.0	%	X	W	O
A32F	H48	PWM Mode	0	0	1		X	W	O
A330	H49	Set PID	0	0	1		X	W	O
A331	H50	PID F/B	0	0	2		X	W	O
A332	H51	PID P-gain	300.0	0	999.9	%	O	W	O
A333	H52	PID I-time	1.00	0.10	32.00	sec	O	W	O
A334	H53	PID D-time	0	0	30.00	sec	O	W	O
A335	H54	Process PID	0	0	1		X	W	O
A336	H55	PID limitH	50.00	pidLimitFreqL	400.00	Hz	O	W	O
A337	H56	PID limitL	0.50	0	pidLimitFreqH	Hz	O	W	O
A338	H57	PID Ref. Set	0	0	4		X	W	O
A33A	H59	PID Out Inv.	0	0	1		X	W	O
A33B	H60	Self-Diag	0	0	maxSelfDiag		X	W	O
A33C	H61	Sleep Delay	60.0	0	2000.0	sec	X	W	O
A33D	H62	Sleep Freq.	0	0	400.00	Hz	O	W	O
A33E	H63	WakeUp Level	2.0	0	50.0	%	O	W	O
A33F	H64	KEB Select	0	0	1		X	W	O
A340	H65	KEB StartLev	125.0	110.0	140.0	%	X	W	O
A341	H66	KEB StopLev	130.0	kebStartLevel	145.0	%	X	W	O
A342	H67	KEB Gain	1000	1	20000		X	W	O
A344	H69	Acc/Dec ch F	0	0	400.00	Hz	X	W	O
A345	H70	Acc/Dec freq	0	0	1	Hz	X	W	O
A346	H71	Xcel T Mode	1	0	2		O	W	O
A347	H72	PowerOn disp	0	0	17		O	W	O
A348	H73	User disp	0	0	2		O	W	O
A349	H74	RPM factor	100	1	1000	%	O	W	O

A34A	H75	DB mode	1	0	1		O	W	O
A34B	H76	DB %ED	10	0	30	%	O	W	O
A34C	H77	FAN Control	0	0	1		O	W	O
A34D	H78	FAN Trip	0	0	1		O	W	O
A34E	H79	S/W Version	2.3	0	10.0		O	R	O
A350	H81	2nd Acc time	5.0	0	6000.0	sec	O	W	O
A351	H82	2nd Dec time	10.0	0	6000.0	sec	O	W	O
A352	H83	2nd BaseFreq	50.00	3000	400.00	Hz	X	W	O
A353	H84	2nd V/F	0	0	2		X	W	O
A354	H85	2nd F-boost	5.0	0	15.0	%	X	W	O
A355	H86	2nd R-boost	5.0	0	15.0	%	X	W	O
A356	H87	2nd Stall	150	30	150	%	X	W	O
A357	H88	2nd ETH 1min	150	contPerc[1]	200	%	O	W	O
A358	H89	2nd ETH cont	100	50	ethPerc[1]	%	O	W	O
A359	H90	2nd R-Curr	1.8	1	50.0	A	X	W	O
A35A	H91	Para Read	0	0	1		X	W	O
A35B	H92	Para Write	0	0	1		X	W	O
A35C	H93	Para Init	0	0	5		X	W	O
A35D	H94	Password set	0	0	65535		O	W	O

I/O GROUP									
A401	I2	VR volt x1	0	0	viXmax[0]	V	O	W	O
A402	I3	VR freq y1	0	0	400.00	Hz	O	W	O
A403	I4	VR volt x2	10.00	viXmin[0]	v1max	V	O	W	O
A404	I5	VR freq y2	50.00	0	400.00	Hz	O	W	O
A405	I6	V1 filter	10	0	9999	msec	O	W	O
A406	I7	V1 volt x1	0	0	viXmax[1]	V	O	W	O
A407	I8	V1 freq y1	0	0	400.00	Hz	O	W	O
A408	I9	V1 volt x2	10.00	viXmin[1]	v1max	V	O	W	O
A409	I10	V1 freq y2	50.00	0	400.00	Hz	O	W	O
A40A	I11	I filter	10	0	9999	msec	O	W	O
A40B	I12	I curr x1	4.00	0	viXmax[2]	mA	O	W	O
A40C	I13	I freq y1	0	0	40000	Hz	O	W	O
A40D	I14	I curr x2	20.00	viXmin[2]	20.00	mA	O	W	O
A40E	I15	I freq y2	50.00	0	40000	Hz	O	W	O
A40F	I16	Wire broken	0	0	2		O	W	O
A410	I17	P1 define	0	0	29		O	W	O
A411	I18	P2 define	1	0	29		O	W	O
A412	I19	P3 define	2	0	29		O	W	O
A413	I20	P4 define	3	0	29		O	W	O
A414	I21	P5 define	4	0	29		O	W	O
A415	I22	P6 define	5	0	29		O	W	O
A416	I23	P7 define	6	0	29		O	W	O
A417	I24	P8 define	7	0	29		O	W	O
A418	I25	In status	0	0	255		O	R	X
A419	I26	Out status	0	0	3		O	R	X
A41A	I27	Ti Filt Num	4	1	15		O	W	O
A41D	I30	ST 4	30.00	0	400.00	Hz	O	W	O
A41E	I31	ST 5	25.00	0	400.00	Hz	O	W	O
A41F	I32	ST 6	20.00	0	400.00	Hz	O	W	O
A420	I33	ST 7	15.00	0	400.00	Hz	O	W	O
A421	I34	Acc Time-1	3.0	0	6000.0	sec	O	W	O
A422	I35	Dec Time-1	3.0	0	6000.0	sec	O	W	O
A423	I36	Acc Time-2	4.0	0	6000.0	sec	O	W	O
A424	I37	Dec Time-2	4.0	0	6000.0	sec	O	W	O
A425	I38	Acc Time-3	5.0	0	6000.0	sec	O	W	O
A426	I39	Dec Time-3	5.0	0	6000.0	sec	O	W	O
A427	I40	Acc Time-4	6.0	0	6000.0	sec	O	W	O
A428	I41	Dec Time-4	6.0	0	6000.0	sec	O	W	O
A429	I42	Acc Time-5	7.0	0	6000.0	sec	O	W	O
A42A	I43	Dec Time-5	7.0	0	6000.0	sec	O	W	O
A42B	I44	Acc Time-6	8.0	0	6000.0	sec	O	W	O
A42C	I45	Dec Time-6	8.0	0	6000.0	sec	O	W	O
A42D	I46	Acc Time-7	9.0	0	6000.0	sec	O	W	O
A42E	I47	Dec Time-7	9.0	0	6000.0	sec	O	W	O
A431	I50	FM mode	0	0	3		O	W	O
A432	I51	FM adjust	100	10	200	%	O	W	O
A433	I52	FDT freq	30.00	0	400.00	Hz	O	W	O
A434	I53	FDT band	10.00	0	400.00	Hz	O	W	O
A435	I54	Aux mode 1	12	0	19		O	W	O
A436	I55	Aux mode 2	17	0	19		O	W	O
A437	I56	Relay mode	2	0	7		O	W	O
A438	I57	CommErrMode	0	0	3		O	W	O

A43A	I59	Protocol	0	0	1		X	W	X
A43B	I60	Inv No.	1	1	250		O	W	O
A43C	I61	Baud rate	3	0	4		O	W	O
A43D	I62	Lost command	0	0	2		O	W	O
A43E	I63	Time out	10	1	1200	sec	O	W	O
A43F	I64	Delay Time	5	2	100	msec	O	W	O
A440	I65	Parity Stop	0	0	3		O	W	O
A441	I66	Read Addr1	5	0	42239		O	W	O
A442	I67	Read Addr2	6	0	42239		O	W	O
A443	I68	Read Addr3	7	0	42239		O	W	O
A444	I69	Read Addr4	8	0	42239		O	W	O
A445	I70	Read Addr5	9	0	42239		O	W	O
A446	I71	Read Addr6	10	0	42239		O	W	O
A447	I72	Read Addr7	11	0	42239		O	W	O
A448	I73	Read Addr8	12	0	42239		O	W	O
A449	I74	Write Addr1	5	0	42239		O	W	O
A44A	I75	Write Addr2	6	0	42239		O	W	O
A44B	I76	Write Addr3	7	0	42239		O	W	O
A44C	I77	Write Addr4	8	0	42239		O	W	O
A44D	I78	Write Addr5	5	0	42239		O	W	O
A44E	I79	Write Addr6	6	0	42239		O	W	O
A44F	I80	Write Addr7	7	0	42239		O	W	O
A450	I81	Write Addr8	8	0	42239		O	W	O
A451	I82	BR Rls Curr	50.0	0	180.0	A	O	W	O
A452	I83	BR Rls Dly	1.00	0	10.00	sec	X	W	O
A453	I84	BR RlsFwdFr	1.00	0	400.00	Hz	X	W	O
A454	I85	BR RlsRevFr	1.00	0	400.00	Hz	X	W	O
A455	I86	BR Eng Dly	1.00	0	10.00	sec	X	W	O
A456	I87	BR Eng Fr	2.00	0	400.00	Hz	X	W	O
A457	I88	FireMode frq	50.00	0	400.00	Hz	O	W	O
A458	I89	Min FBK Val	0.0	0	100.0		O	W	O
A459	I90	Max FBK Val	100.0	0	100.0		O	W	O
A45A	I91	MO Inverse	0	0	1		O	W	O
A45B	I92	MO On Delay	0	0	10.0	sec	X	W	O
A45C	I93	MO Off Dela	0	0	10.0	sec	X	W	O
A45D	I94	30ABC On DLY	0	0	10.0	sec	X	W	O
A45E	I95	30ABC Off DL	0	0	10.0	sec	X	W	O
A45F	I96	NO Warranty	0	0	1		X	R	O

13.8 Troubleshooting

Refer to Troubleshooting when RS485 communication error occurs.

Check points	Corrective measures
Is the power provided to the converter?	Provide electric power to the converter.
Are the connections between converter and computer correct?	Refer to converter manual.
Is Master not polling?	Verify the master is polling the inverter.
Is baud rate of computer and inverter correctly set?	Set the correct value in accordance with“13.3 Installation”.
Is the data format of user program* right?	Revise User Program (Note1).
Is the connection between converter and communication card right?	Check for GF the correct wiring in accordance with“13.3 Installation”.

(Note 1) User program is User-made S/W for PC.

13.9 Miscellaneous

ASCII Code List

Character	Hex	Character	Hex	Character	Hex	Character	Hex	Character	Hex
A	41	a	61	0	30	:	3A	DLE	10
B	42	b	62	1	31	;	3B	EM	19
C	43	c	63	2	32	<	3C	ACK	06
D	44	d	64	3	33	=	3D	ENQ	05
E	45	e	65	4	34	>	3E	EOT	04
F	46	f	66	5	35	?	3F	ESC	1B
G	47	g	67	6	36	@	40	ETB	17
H	48	h	68	7	37	[	5B	ETX	03
I	49	i	69	8	38	\	5C	FF	0C
J	4A	J	6A	9	39	]	5D	FS	1C
K	4B	k	6B	space	20		5E	GS	1D
L	4C	l	6C	!	21		5F	HT	09
M	4D	m	6D	"	22		60	LF	0A
N	4E	n	6E	#	23	{	7B	NAK	15
O	4F	o	6F	$	24	|	7C	NUL	00
P	50	p	70	%	25	}	7D	RS	1E
Q	51	q	71	&	26	~	7E	S1	0F
R	52	r	72	'	27	BEL	07	SO	0E
S	53	s	73	(	28	BS	08	SOH	01
T	54	t	74	)	29	CAN	18	STX	02
U	55	u	75	*	2A	CR	0D	SUB	1A
V	56	v	76	+	2B	DC1	11	SYN	16
W	57	w	77	,	2C	DC2	12	US	1F
X	58	x	78	-	2D	DC3	13	VT	0B
Y	59	y	79	.	2E	DC4	14		
Z	5A	z	7A	/	2F	DEL	7F		

Notes:

CHAPTER 14 - TROUBLESHOOTING & MAINTENANCE

14.1 Protective functions

⚠ WARNING

When a fault occurs, the cause must be corrected before the fault can be cleared. If protective function keeps active, it could lead to reduction in product life and damage to the equipment.

- Fault Display and information

Keypad display	Protective functions	Descriptions
OCt	Overcurrent	The inverter turns off its output when the output current of the inverter flows greater than the inverter rated current.
OC2	Overcurrent2	When IGBT's Arm is short and output short occurs, the inverter turns off its output.
GFt	Ground fault current	The inverter turns off its output when a ground fault occurs and the ground fault current is greater than the internal setting value of the inverter.
IOL	Inverter Overload	The inverter turns off its output when the output current of the inverter flows greater than the rated level (150% for 1 minute).
OLt	Overload trip	The inverter turns off its output if the output current of the inverter flows at 150% of the inverter rated current for more than the current limit time (1 min).
OHt	Inverter overheat	The inverter turns off its output if the heatsink overheats due to a damaged cooling fan or an alien substance in the cooling fan by detecting the temperature of the heatsink.
POt	Output Phase loss	The inverter turns off its output when one or more of the output (U, V, W) phase is open. The inverter detects the output current to check the phase loss of the output.
Out	Over voltage	The inverter turns off its output if the DC voltage of the DC BUS exceeds 400V for 2S/T class and 820V for 4T class when the motor decelerates. This fault can also occur due to a surge voltage generated at the power supply system.
Lut	Low voltage	The inverter turns off its output if the DC voltage drops below 180V for 2S/T class and 360V for 4T class because insufficient torque or overheating of the motor can occur when the input voltage of the inverter drops.
EtH	Electronic Thermal	The internal electronic thermal of the inverter determines the overheating of the motor. If the motor is overloaded the inverter turns off the output. The inverter cannot protect the motor when driving a motor having more than 4 poles or multi motors.
COL	Input phase loss	Inverter output is blocked when one of R, S, T is open or the electrolytic capacitor needs to be replaced.

- Fault Display and Information

Keypad display	Protective functions	Descriptions
FLtL	Self-diagnostic malfunction	Displayed when IGBT damage, output phase short, output phase ground fault or output phase open occurs.
EEP	Parameter save error	Displayed when user-setting parameters fails to be entered into memory.
H'Wt	Inverter hardware fault	Displayed when an error occurs in the control circuit of the inverter.
Err	Communication Error	Displayed when the inverter cannot communicate with the keypad.
rErr	Remote keypad communication error	Displayed when inverter and remote keypad does not communicate each other. It does not stop Inverter operation.
CoM	Keypad error	Displayed after Inverter resets keypad when keypad error occurs and this status is maintained for a certain time.
FAn	Cooling fan fault	Displayed when a fault condition occurs in the inverter cooling fan.
EST	Instant cut off	Used for the emergency stop of the inverter. The inverter instantly turns off the output when the EST terminal is turned on. ⚠ **Caution:** The inverter starts to regular operation when turning off the EST terminal while FX or RX terminal is ON.
EtA	External fault A contact input	When multi-function input terminal (I17-I24) is set to 18 {External fault signal input: A (Normal Open Contact)}, the inverter turns off the output.
Etb	External fault B contact input	When multi-function input terminal (I17-I24) is set to 19 {External fault signal input: B (Normal Close Contact)}, the inverter turns off the output.
_ _ l	Operating method when the frequency command is lost	When inverter operation is set via Analog input (0-10V or 0-20mA input) or (RS485) and no signal is applied, operation is done according to the method set in I62 (Operating method when the frequency reference is lost).
ntC	NTC open	When NTC is not connected, outputs are cut off.
nbr	Brake control error	When the External Brake control function is activated, if the rating current flows below the set value during over 10 sec, the output is cut off without opening the brake.

14.2 Fault remedy

Keypad display	Cause	Remedy
OCt Overcurrent	⚠ **Caution:** When an overcurrent fault occurs, operation must be started after the cause is removed to avoid damage to IGBT inside the inverter.	
	Accel/Decel time is too short compared to the GD^2 of the load. Load is greater than the inverter rating. Inverter output is issued when the motor is free running. Output short circuit or ground fault has occurred. Mechanical brake of the motor is operating too fast.	☞ Increase the Accel/Decel time. ☞ Replace the inverter with appropriate capacity. ☞ Resume operation after stopping the motor or use H22 (Speed search). ☞ Check output wiring. ☞ Check the mechanical brake.
OC2 Overcurrent2	Short occurs between up and down of IGBTs. Inverter output short occurs. Accel/Decel time is too short if compared to GD^2.	☞ Check the IGBTs. ☞ Check output wiring. ☞ Increase the Accel/Decel time.
GFt Ground fault current	Ground fault has occurred at the output wiring of the inverter The insulation of the motor is damaged.	☞ Check the wiring of the output terminal. ☞ Replace the motor.
IOL Inverter overload OLt Overload trip	Load is greater than the inverter rating. Torque boost scale is set too large.	☞ Upgrade the capacity of motor and inverter or reduce the load weight. ☞ Reduce torque boost scale.
OHt Inverter overheat	Cooling system has faults. A damaged cooling fan is not replaced with a new one. Ambient temperature is too high.	☞ Check for alien substances clogged in the heatsink. ☞ Replace the damaged cooling fan with a new one. ☞ Keep ambient temperature under 50°C.
POt Output Phase loss	Faulty contact of magnetic switch at output Faulty output wiring	☞ Make connection of magnetic switch at output of the inverter securely. ☞ Check output wiring.
FAn Cooling fan fault	An alien substance is clogged in a ventilating slot. Inverter has been in use without changing a damaged cooling fan.	☞ Check the ventilating slot and remove the clogged substances. ☞ Replace the damaged cooling fan.

- Fault remedy

Keypad display	Cause	Remedy
Out Over voltage	Decel time is too short compared to the GD^2 of the load. Regenerative load is connected at the inverter output. Line voltage is too high.	☞ Increase the Decel time. ☞ Use Dynamic Brake Unit. ☞ Check whether line voltage exceeds its rating.
Lut Low voltage	Line voltage is low. Load larger than line capacity is connected to line (ex: welding machine, motor with high starting current connected to the commercial line). Faulty magnetic switch at the input side of the inverter.	☞ Check whether line voltage is below its rating. ☞ Check the incoming AC line. Adjust the line capacity corresponding to the load. ☞ Change a magnetic switch.
EtH Electronic thermal	Motor has overheated. Load is greater than inverter rating. ETH level is set too low. Inverter capacity is incorrectly selected. Inverter has been operated at low speed for too long.	☞ Reduce load capacity and operating duty. ☞ Change inverter with higher capacity. ☞ Adjust ETH level to an appropriate level. ☞ Select correct inverter capacity. ☞ Install a cooling fan with a separate power supply.
EtA External fault A contact input	The terminal set to “18 (External fault-A)” or “19 (External fault-B)” in I20-I24 in I/O group is ON.	☞ Eliminate the cause of fault at circuit connected to external fault terminal or cause of external fault input.
Etb External fault B contact input		
_ _ L Operating method when the frequency command is lost	No frequency command is applied to V1 and I.	☞ Check the wiring of V1 and I and frequency reference level.
rErr Remote keypad communication error	Communication error between inverter keypad and remote keypad	☞ Check for connection of communication line and connector.
nbr Brake control error	No brake open current is flowing.	☞Check the Motor Capacity & Wiring.

- Fault remedy

Protective functions & cause	Description
EEP HWt Err COM ntC EEP : Parameter save error HWT : Hardware fault Err : Communication error COM : Keypad error NTC : NTC error	☞ Contact your local ES sales representative.

☞ **Overload Protection**

IOLT : IOLT(inverter Overload Trip) protection is activated at 150% of the inverter rated current for 1 minute and greater.

OLT : OLT is selected when F56 is set to 1 and activated at 200% of F57[Motor rated current] for 60 sec in F58. This can be programmable.

Sinus M is not provided with "Overspeed Protection."

14.3 Precautions for maintenance and inspection

⚠ WARNING

- Make sure to remove the input power while performing maintenance.
- Make sure to perform maintenance after checking the DC link capacitor has discharged. The bus capacitors in the inverter main circuit can still be charged even after the power is turned off. Check the voltage between terminal P or P1 and N using a tester before proceeding.
- Sinus M series inverter has ESD (Electrostatic Discharge) sensitive components. Take protective measures against ESD before touching them for inspection or installation.
- Do not change any inner parts and connectors. Never modify the inverter.

14.4 Check points

■ Daily inspections

Proper installation environment

Cooling system fault

Unusual vibration and noise

Unusual overheating and discoloration

■ Periodic inspection

Screws and bolts may become loose due to vibration, temperature changes, etc.

Check that they are tightened securely and retighten as necessary.

Alien substances are clogged in the cooling system.

Clean it using dry air.

Check the rotating condition of the cooling fan, the condition of capacitors and the connections with the magnetic contactor.

Replace them if there are any abnormalities.

14.5 Part replacement

The inverter consists of many electronic parts such as semiconductor devices. The following parts may deteriorate with age because of their structures or physical characteristics, leading to reduced performance or failure of the inverter. For preventive maintenance, the parts must be changed periodically. The parts replacement guidelines are indicated in the following table. Lamps and other short-life parts must also be changed during periodic inspection.

Part name	Change period (unit: Year)	Description
Cooling fan	3	Exchange (as required)
DC link capacitor in main circuit	4	Exchange (as required)
Electrolytic capacitor on control board	4	Exchange (as required)
Relays	-	Exchange (as required)

CHAPTER 15 - SPECIFICATIONS

- Input & output ratings: 200-230V

SINUS M ■ ■ ■ 2S/T BA2K2		0001	0002	0003	0005	0007	0011	0014	0017	0020	0025	0030
Max capacity[1] Motor power 200-230Vac	[HP]	0.5	1-1.5	2-2.5	3-4	5.5-6	7.5	10-12.5	15	20	25	30
	[kW]	0.4	0.75-1.1	1.5-1.8	2.2-3	4.0-4.5	5.5	7.5-9.2	11	15	18.5	22
Output ratings	Capacity [kVA] [2]	0.95	1.9	3.0	4.5	6.5	9.1	12.2	17.5	22.9	28.2	33.5
	FLA [A] [3]	2.5	5	8	12	17	24	32	46	60	74	88
	Max Frequency	400 [Hz] [4]										
	Max Voltage	3Φ 200 ~ 230V [5]										
Input ratings	Rated Voltage	3Φ 200 ~ 230 VAC (+10%, –15%)										
	Rated Frequency	50 ~ 60 [Hz] (±5%)										
Cooling method		N/C[6]	Forced cooling									
Weight [kg]		0.76	0.77	1.12	1.84	1.89	3.66	3.66	9.0	9.0	13.3	13.3

- Input & output ratings: 380-480V

SINUS M ■ ■ ■ 4T BA2K2		0001	0002	0003	0005	0007	0011	0014	0017	0020	0025	0030
Max capacity[1] Motor power 380-415Vac	[HP]	0.5	1-1.25	2	3	5.5-6	7.5	10	15	20	25	30
	[kW]	0.4	0.75-0.9	1.5	2.2	4-4.5	5.5	7.5	11	15	18.5	22
Max capacity[1] Motor power 440-460Vac	[HP]	0.5	1-1.5	2-3	3-4	5.5-6	7.5	10-12.5	15	20	30	30
	[kW]	0.4	0.75-1.1	1.5-1.8	2.2-3	4-4.5	5.5	7.5-9.2	11	15	22	22
Output ratings	Capacity [kVA] [2]	0.95	1.9	3.0	4.5	6.9	9.1	12.2	18.3	22.9	29.7	34.3
	FLA [A] [3]	1.25	2.5	4	6	9	12	16	24	30	39	45
	Max Frequency	400 [Hz] [4]										
	Max Voltage	3Φ 380 ~ 480V [5]										
Input ratings	Rated Voltage	3Φ 380 ~ 480 VAC (+10%, –15%)										
	Rated Frequency	50 ~ 60 [Hz] (±5%)										
Cooling method		N/C[6]	Forced cooling									
Weight [kg]		0.76	0.77	1.12	1.84	1.89	3.66	3.66	9.0	9.0	13.3	13.3

1) Indicates the maximum applicable motor capacity when using a 4-pole ES Standard motor.

2) Rated capacity is based on 220V for 2S/T class and on 440V for 4T class.

3) Refer to section Inverter Efficiency and Heating Loss when Carrier frequency setting (H39) is above 3kHz.

4) Max. frequency setting range is extended to 300Hz when H40 (Control mode select) is set to 3 (Sensorless vector control).
5) Maximum output voltage cannot be higher than the input voltage. It can be programmable below the input voltage.
6) Natural convection.

- Control

Control method		V/F, Sensorless vector control
Frequency setting resolution		Digital command: 0.01Hz Analog command: 0.06Hz (Max freq.: 60Hz)
Frequency accuracy		Digital command: 0.01% of Max output frequency Analog command: 0.1% of Max output frequency
V/F pattern		Linear, Squared, User V/F
Overload capacity		150% per 1 min.
Torque boost		Manual/Auto torque boost
Dynamic Braking	Max braking torque	20% 1)
	Time/%ED	150% 2) when using optional DB resistor

1) Means average braking torque during Decel to stop of a motor.

2) Refer to Chapter 16 for DB resistor specification.

- Operation

Operation mode		Keypad/ Terminal/ Communication option/ Remote keypad selectable	
Frequency setting		Analog: 0 ~ 10[V], –10 ~ 10[V], 0 ~ 20[mA] Digital: Keypad	
Operation features		PID, Up-down, 3-wire	
Input	Multi-function terminal P1 ~ P8	NPN / PNP selectable	
		FWD/REV RUN, Emergency stop, Fault reset, Jog operation, Multi-step Frequency-High, Mid, Low, Multi-step Accel/Decel-High, Mid, Low, DC braking at stop, 2nd motor select, Frequency UP/Down, 3-wire operation, External trip A, B, PID-Inverter (V/f) operation bypass, Option-inverter (V/f) operation bypass, Analog Hold, Accel/Decel stop, Up/Down Save Freq, Open Loop 1, Fire Mode.	
Output	Open collector terminal	Fault output and inverter status output	Less than 26Vdc 100mA
	Multi-function relay		(N.O., N.C.) Less than 250VAC 1A, Less than 30VDC 1A
	Analog output	0 ~ 10 Vdc (less than10mA): Output Freq, Output Current, Output Voltage, DC link selectable	

- Protective function

Trip	Over Voltage, Under Voltage, Over Current, Over Current2, Ground Fault current detection, Inverter Overheat, Motor Overheat, Output Phase Open, Overload Protection, Communication Error, Loss of Speed Command, Hardware Fault, Fan trip, Brake error
Alarm	Stall prevention, overload
Momentary Power Loss	Below 15 msec: Continuous operation (should be within rated input voltage, rated output power). Above 15 msec: Auto restart enable

- Environment

Degree of protection	IP20
Ambient temp	–10°C ~ 50°C
Storage temp	–20°C ~ 65°C
Humidity	Below 90% RH (no condensation)
Altitude/Vibration	Below 1,000m, 5.9m/sec^2 (0.6G)
Atmospheric pressure	70~106 kPa
Location	Protected from corrosive gas, combustible gas, oil mist or dust

15.1 Temperature Derating Information

- Load and ambient temperature classified by the Carrier Frequency

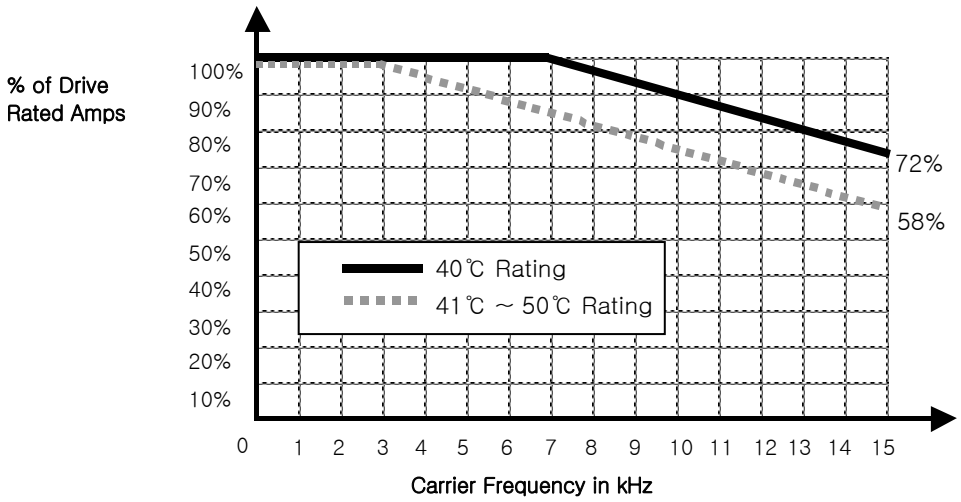

⚠ CAUTION

1) The above graph is only applied when the inverter is operated in the allowable temperature. Pay attention to the air cooling when the inverter is installed in a panel box, and the inside temperature should be within an allowable temperature range.
2) This derating curve is based on inverter current rating when rated motor is connected.

15.2 Inverter Efficiency and Heating Loss

- Measured conditions: 50Hz; 100% Current Load; Default Carrier Frequency.

Note: The inverter efficiency is computed by considering the SMPS power consumption.

SINUS M ■ ■ ■ 2S/T BA2K2		0001	0002	0003	0005	0007	0011	0014	0017	0020	0025	0030
Efficiency	%	95.3	95.5	98.4	97.2	97.2	98.4	98.9	97.0	95.2	95.7	96.2
Heating Loss	W	13	28	18	56	106	73	70	290	683	759	799
	kcal	11	24	15	48	91	63	61	249	587	799	687

SINUS M ■ ■ ■ 4T BA2K2		0001	0002	0003	0005	0007	0011	0014	0017	0020	0025	0030
Efficiency	%	96.2	96.2	97.5	97.6	97.5	98.2	98.3	97.0	95.7	95.7	95.2
Heating Loss	W	9	22	32	47	94	84	113	293	608	759	1019
	kcal	8	19	27	40	81	72	97	252	523	652	877

CHAPTER 16 - OPTIONS

16.1 Remote option

1) Remote Keypad

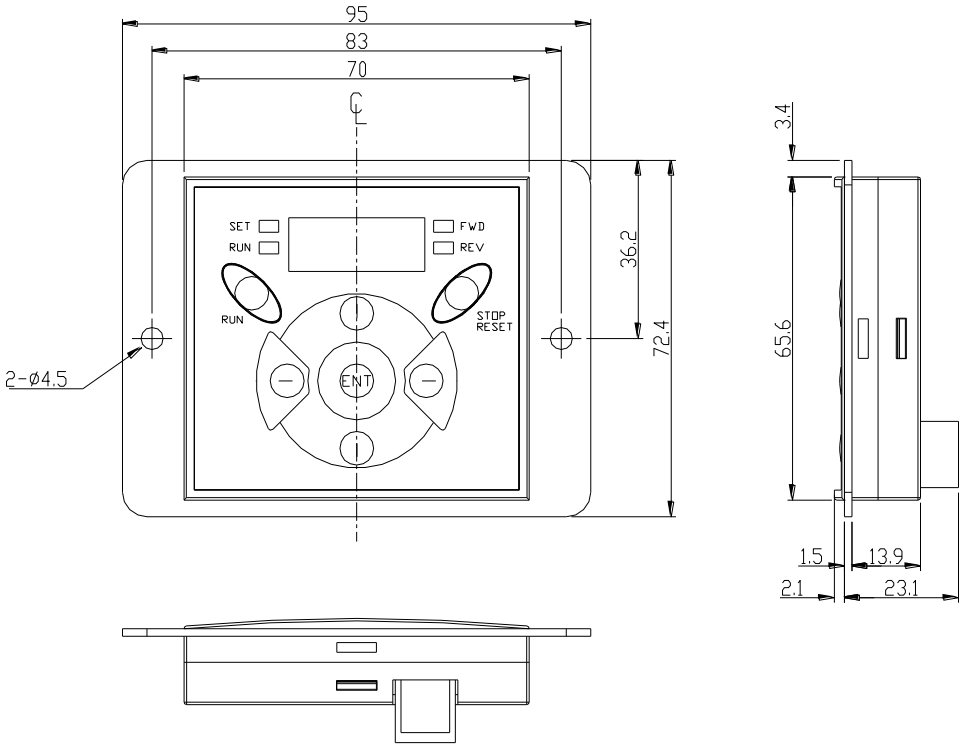

2) Remote Cable (2M,3M,5M)

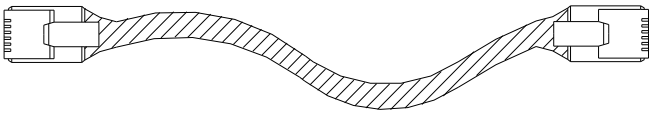

● Remote Cable Model Number

Model number	Specification
On request	INV, REMOTE 2M (Sinus M)
ZZ0073100	INV, REMOTE 3M (Sinus M)
On request	INV, REMOTE 5M (Sinus M)

● Installation

1) Take off the top cover of the I/O board kit and remove the hole cover to connect remote cable on the side.

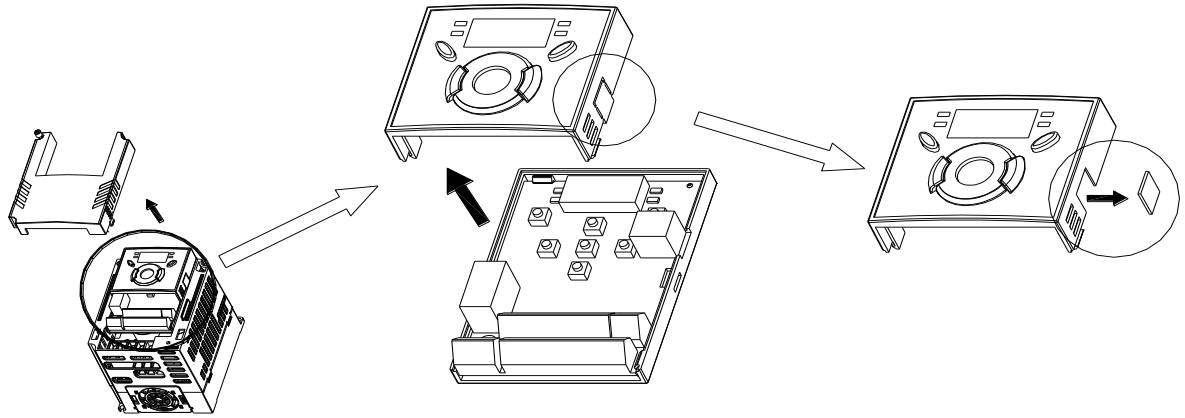

2) Attach the top cover of the I/O board kit and connect the remote cable as shown below.

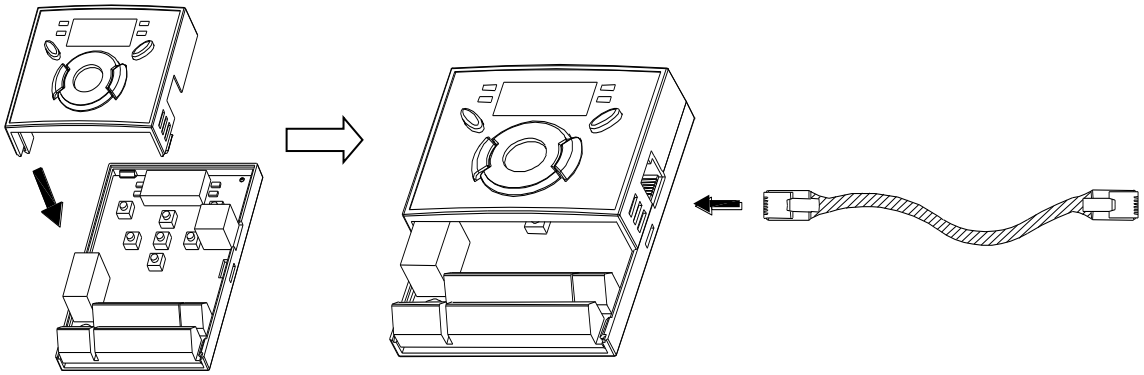

3) Connect the other side of the remote cable to the remote keypad as shown below.

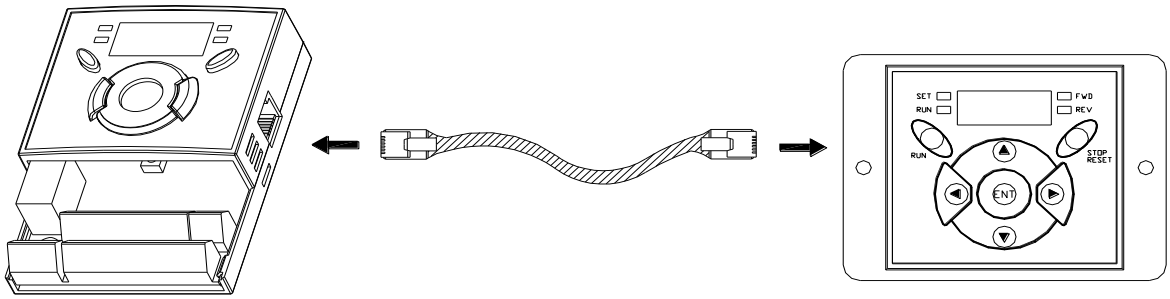

⚠ CAUTION
● Without Parameter Read, Parameter Write is not available since the Remote memory is empty when the Remote keypad is first used. ● Do not use the remote cable other than standard ES'. Otherwise, malfunction may occur due to noise input or voltage drop in the keypad. ● Check for disconnection of the communication cable and/or poor cable connection if "----" is displayed on the 7-segment display of the Remote keypad. ● When Parameter Read(H91) is executed, "rd"(Read) and "wr"(Verifiy) is displayed successively on the 7-segment display of the Remote keypad. On the other hand, when Parameter Write(H92) is executed, "wr"(Write) is displayed only.

16.2 Conduit Kit

- Installation

1) From SINUS M 0001 to SINUS M 0007.

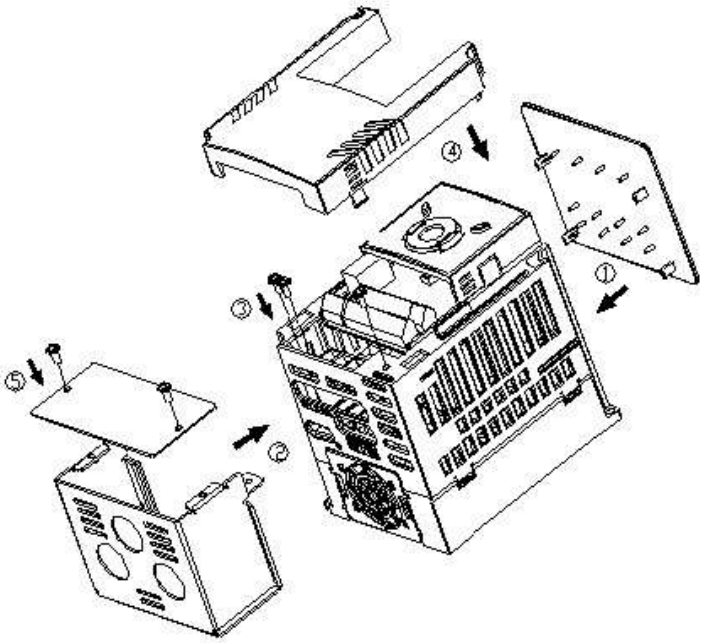

2) From SINUS M 0011 to SINUS M 0014.

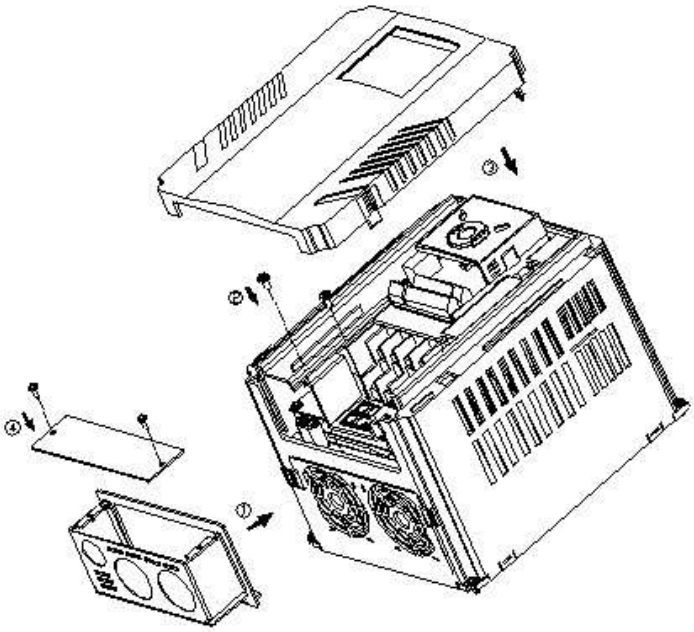

3) From SINUS M 0017 to SINUS M 0030.

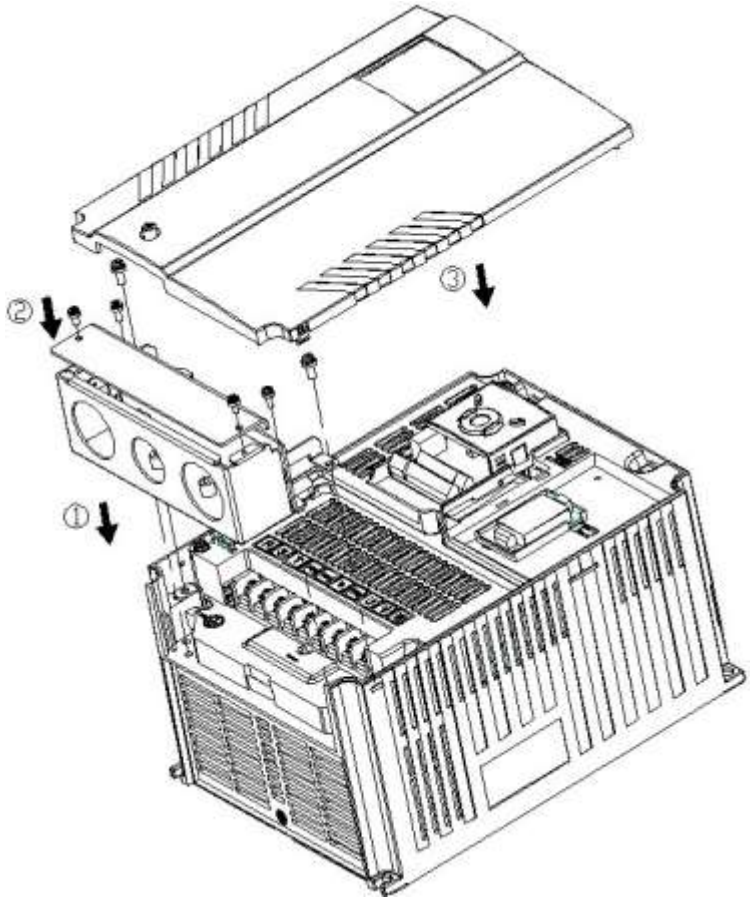

● Conduit kit

Conduit Kit	Code	Model
Inverter Conduit Kit 1	ZZ0073102	SINUS M 0001 – SINUS M 0002
Inverter Conduit Kit 2	ZZ0073104	SINUS M 0003
Inverter Conduit Kit 3	ZZ0073106	SINUS M 0005 – SINUS M 0007
Inverter Conduit Kit 4	ZZ0073108	SINUS M 0011 – SINUS M 0014
Inverter Conduit Kit 5	ZZ0073110	SINUS M 0017 – SINUS M 0020
Inverter Conduit Kit 6	ZZ0073112	SINUS M 0025 – SINUS M 0030

16.3 EMC Filters

EMI / RFI POWER LINE FILTERS

THE ES RANGE OF POWER LINE FILTERS FFM (Footprint) AND FV SERIES, HAVE BEEN SPECIFICALLY DESIGNED WITH HIGH FREQUENCY ES INVERTERS. THE USE OF ES FILTERS, WITH THE INSTALLATION ADVICE OVERLEAF HELP ENSURE TROUBLE FREE USE ALONG SIDE SENSITIVE DEVICES AND COMPLIANCE TO CONDUCTED EMISSION AND IMMUNITY STANDARDS EN61800-3.

⚠ CAUTION

IN CASE OF LEAKAGE CURRENT, A PROTECTIVE DEVICE IS USED ON POWER SUPPLY, THAT COULD BE DAMAGED WHEN POWERING ON/OFF THE DEVICE. TO AVOID THIS, THE SENSE CURRENT OF THE PROTECTIVE DEVICE SHOULD BE LARGER THAN THE VALUE OF THE LEAKAGE CURRENT. SEE TABLE BELOW.

RECOMMENDED INSTALLATION INSTRUCTIONS

To conform to the EMC directive, it is necessary that these instructions be followed as closely as possible. Follow the usual safety procedures when working with electrical equipment. All electrical connections to the filter, inverter and motor must be made by a qualified electrical technician.

1-) Check the filter rating label to ensure that the current, voltage rating and part number are correct.
2-) For best results the filter should be fitted as closely as possible to the incoming mains supply of the wiring enclosure, usually directly after the enclosures circuit breaker or supply switch.
3-) The back panel of the wiring cabinet of board should be prepared for the mounting dimensions of the filter. Care should be taken to remove any paint etc... from the mounting holes and face area of the panel to ensure the best possible earth connection of the filter.
4-) Mount the filter securely.
5-) Connect the mains supply to the filter terminals marked LINE, connect any earth cables to the earth stud provided. Connect the filter terminals marked LOAD to the mains input of the inverter using short lengths of appropriate gauge cable.
6-) Connect the motor and fit the ferrite core (output ferrite ring) as close to the inverter as possible. Armoured or screened cable should be used with the 3 phase conductors only threaded twice through the center of the ferrite core. The earth conductor should be securely earthed at both inverter and motor ends. The screen should be connected to the enclosure body via and earthed cable gland.
7-) Connect any control cables as instructed in the inverter instructions manual.

IT IS IMPORTANT THAT ALL LEAD LENGTHS ARE KEPT AS SHORT AS POSSIBLE AND THAT INCOMING MAINS AND OUTGOING MOTOR CABLES ARE KEPT WELL SEPARATED.

ENERTRONICA SANTERNO

SINUS M series / FFM Filters (Footprint)										
INVERTER	**POWER**	**CODE**	**CURRENT**	**VOLTAGE**	**LEAKAGE CURRENT**	**DIMENSIONS L W H**	**MOUNTING X Y**	**WEIGHT**	**MOUNT**	**OUTPUT FERRITE**
					NOM. MAX.					
SINUS 0001 2S/T	0.4kW	**AC1710101***	5A	200÷480VAC	0.5mA 27mA	175x76.5x40	161x53	1.2kg	M4	**AC1810302**
SINUS 0002 2S/T	1.1kW									
SINUS 0003 2S/T	1.8kW	**AC1710201***	12A	200÷480VAC	0.5mA 27mA	176.5x107.5x40	162.5x84	1.3kg	M4	**AC1810302**
SINUS 0005 2S/T	3kW	**AC1710202***	20A	200÷480VAC	0.5mA 27mA	176.5x147.5x45	162.5x124	1.8kg	M4	**AC1810302**
SINUS 0007 2S/T	4.5kW									
SINUS 0011 2S/T	5.5kW	**AC1710300***	30A	200÷480VAC	0.5mA 27mA	266x185.5x60	252x162	2kg	M4	**AC1810302**
SINUS 0014 2S/T	9.2kW	**AC1710500***	50A	200÷480VAC	0.5mA 27mA	270x189.5x60	252x162	2.5kg	M4	**AC1810402**
SINUS 0017 2S/T	11kW	**Not available (see Standard Filters)**								
SINUS 0020 2S/T	15kW									
SINUS 0025 2S/T	18kW									
SINUS 0030 2S/T	22kW									
SINUS 0001 4T	0.4kW	**AC1710101***	5A	200÷480VAC	0.5mA 27mA	175x76.5x40	161x53	1.2kg	M4	**AC1810302**
SINUS 0002 4T	0.9kW									
SINUS 0003 4T	1.5kW	**AC1710104***	6A	200÷480VAC	0.5mA 27mA	176.5x107.5x40	162.5x84	1.2kg	M4	**AC1810302**
SINUS 0005 4T	2.2kW	**AC1710200***	11A	200÷480VAC	0.5mA 27mA	176.5x147.5x45	162.5x124	1.5kg	M4	**AC1810302**
SINUS 0007 4T	4.5kW									
SINUS 0011 4T	5.5kW	**AC1710300***	30A	200÷480VAC	0.5mA 27mA	266x185.5x60	252x162	2kg	M4	**AC1810302**
SINUS 0014 4T	7.5kW									
SINUS 0017 4T	11kW	**AC1710510***	51A	200÷480VAC	0.5mA 27mA	368x258.5x65	354x217	2.5kg	M6	**AC1810402**
SINUS 0020 4T	15kW									
SINUS 0025 4T	18kW	**AC1710600***	60A	200÷480VAC	0.5mA 27mA	460x288x65	446x246	2.8kg	M8	**AC1810402**
SINUS 0030 4T	22kW	**AC1710700***	70A	200÷480VAC	0.5mA 27mA	460x288x65	446x246	2.8kg	M8	**AC1810402**

SINUS M series / Standard Filters										
INVERTER	**POWER**	**CODE**	**CURRENT**	**VOLTAGE**	**LEAKAGE CURRENT**	**DIMENSIONS L W H**	**MOUNTING Y**	**WEIGHT**	**MOUNT**	**OUTPUT FERRITE**
					NOM. MAX.					
SINUS 0017 2S/T	11kW	**AC1711000***	100A	250VAC	0.5mA 27mA	420x200x130	408x166	13.8 kg	–	**AC1810603**
SINUS 0020 2S/T	15kW									
SINUS 0025 2S/T	18kW	**AC1711100***	120A	250VAC	0.5mA 27mA	420x200x130	408x166	13.8 kg	–	**AC1810603**
SINUS 0030 2S/T	22kW									

* Domestic and industrial environment EN50081-1 (B class) → EN61000-6-3:02

FFM Filters (Footprint)

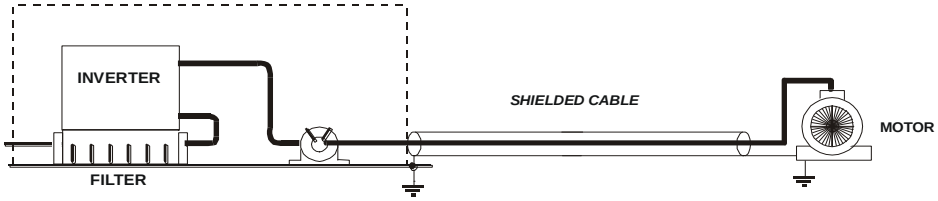

Standard Filters

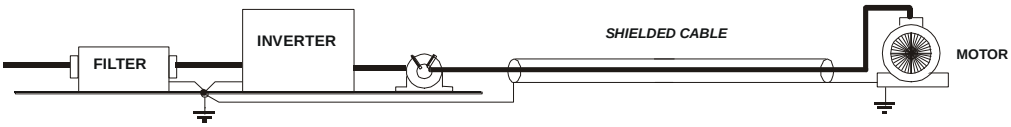

FFM Filters (Footprint)

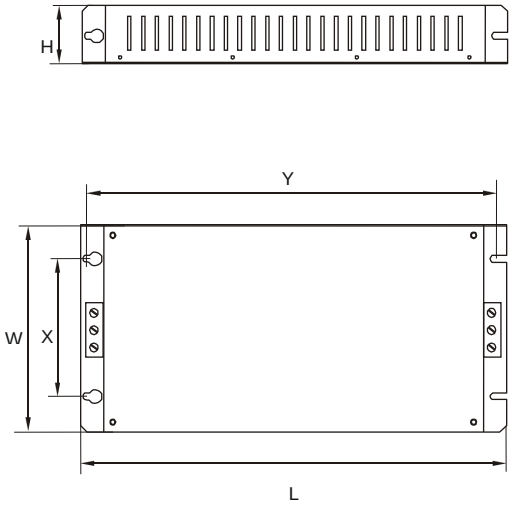

Standard Filters

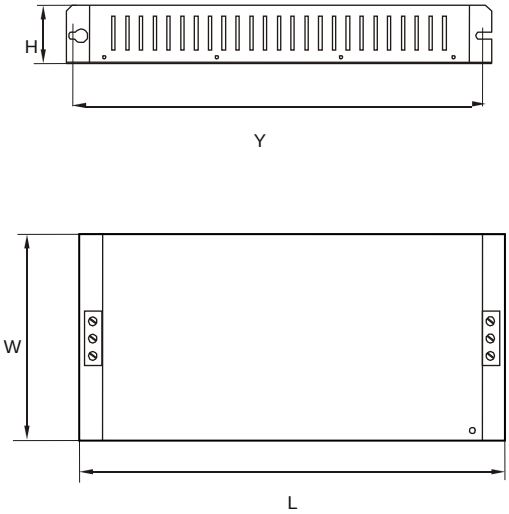

Output ferrite ring

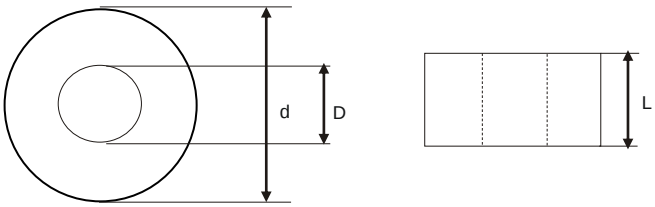

FILTER	TYPE	D	d	L
AC1810302	2xK618	15	26	22
AC1810402	2xK674	23	37	31
AC1810603	3xK40	41	60	58

16.4 Braking resistors

2S/T Class Inverter (200÷230Vac)

SINUS M	0001 2S/T	0002 2S/T	0003 2S/T	0005 2S/T	0007 2S/T	0011 2S/T
Resistor	200Ω 350W*	100Ω 350W	56Ω 350W	56Ω 350W	50Ω 1100W	15Ω 1100W
Code	RE2644200	RE2644100	RE2643560	RE2643560	RE3083500	RE3083150

2S/T Class Inverter (200÷230Vac)

SINUS M	0014 2S/T	0017 2S/T	0020 2S/T	0025 2S/T	0030 2S/T
Resistor	15Ω 1100W	10Ω 2200W	10Ω 2200W	5Ω 4000W	5Ω 4000W
Code	RE3083150	RE3113100	RE3113100	RE3482500	RE3482500

4T Class Inverter (380÷480Vac)

SINUS M	0001 4T	0002 4T	0003 4T	0005 4T	0007 4T	0011 4T
Resistor	400Ω 350W	400Ω 350W	200Ω 350W	200Ω 350W	100Ω 550W	75Ω 550W
Code	RE2644400	RE2644400	RE2644200	RE2644200	RE3064100	RE3063750

4T Class Inverter (380÷480Vac)

SINUS M	0014 4T	0017 4T	0020 4T	0025 4T	0030 4T
Resistor	50Ω 1100W	33Ω 2200W	33Ω 2200W	20Ω 4000W	20Ω 4000W
Code	RE3083500	RE3113330	RE3113330	RE3483200	RE3483200

Suggested braking resistors are for standard applications where enable duty and continuous braking are lower than the given values. For heavy duty (applications where load is pulled for more time than max. continuous braking, stopping of big flywheels and so on), please contact Enertronica Santerno S.p.A..

* The wattage is based on Enable duty (%ED) 5%, Average braking torque of 150% with a continuous braking time of 15 sec.

16.4.1 Dimensions

Model 350W - IP55

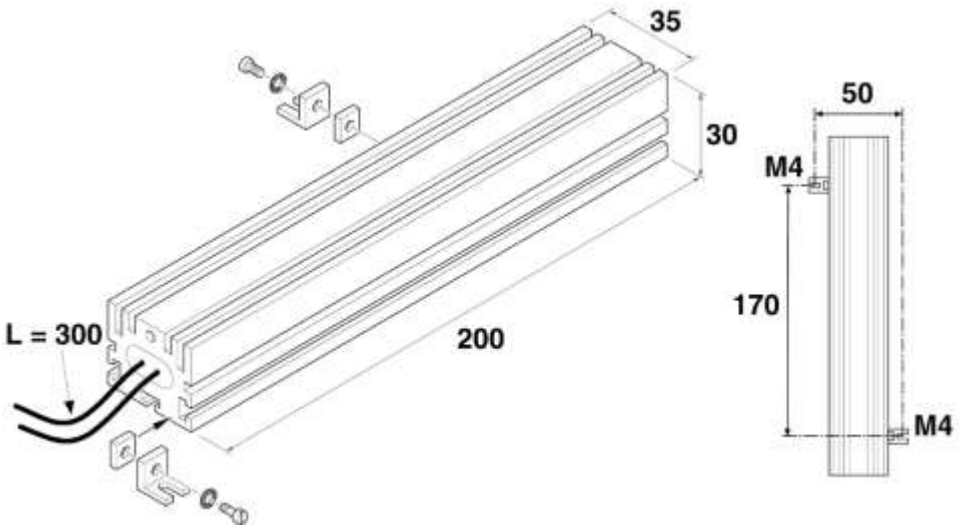

Overall Dimensions, Resistor 350W – IP55

Model 550W - IP55

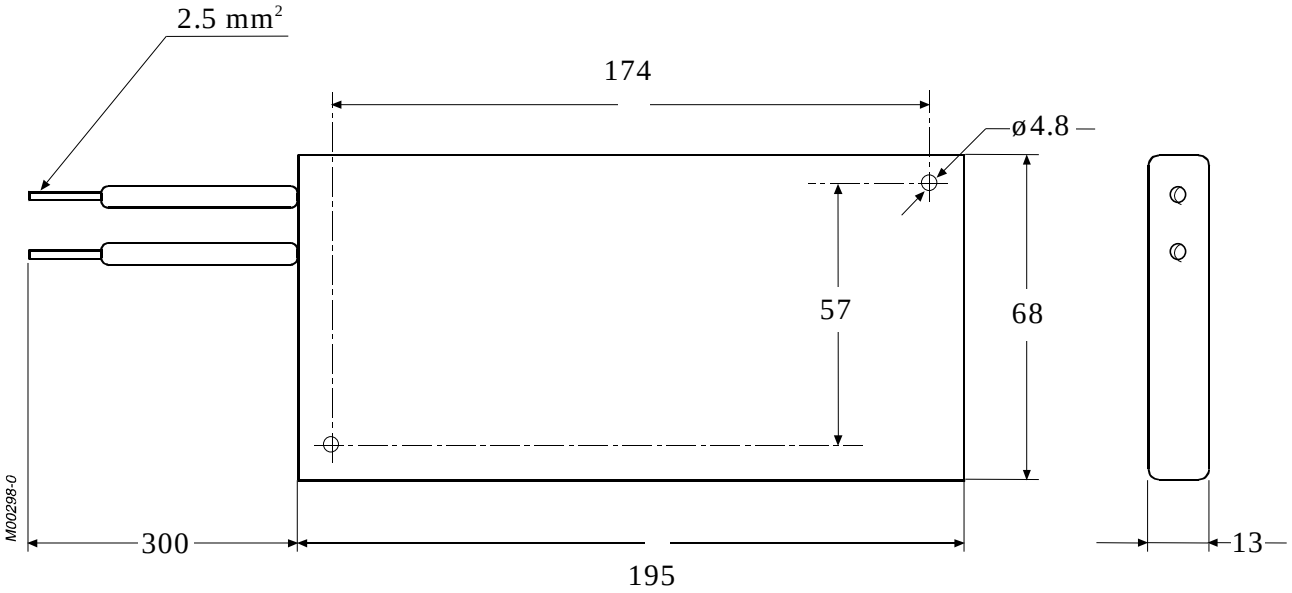

Overall Dimensions, Resistor 550W – IP55

Model 1100W - IP55

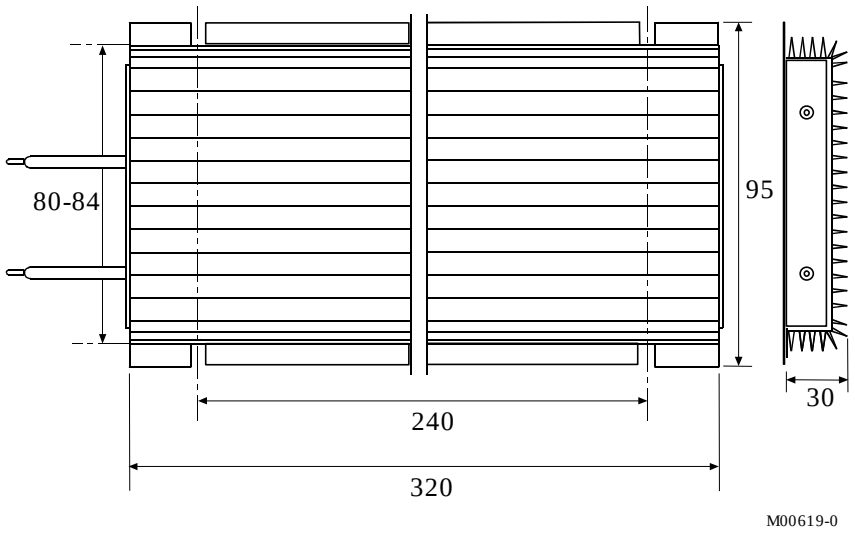

Overall Dimensions, Resistor 1100W – IP55

Model 2200W – IP54

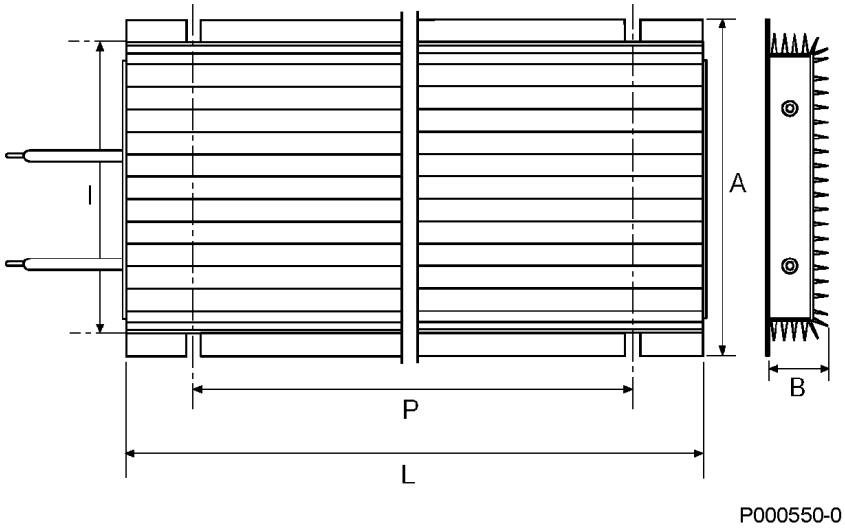

A (mm)	B (mm)	L (mm)	I (mm)	P (mm)
190	67	380	177-182	300

Overall Dimensions, Resistor 2200W – IP54

Model 4000W – IP20

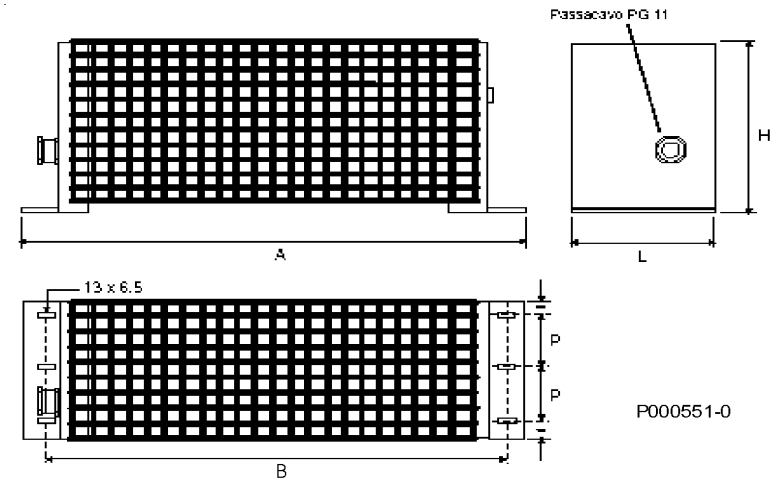

A (mm)	B (mm)	L (mm)	H (mm)	P (mm)
620	600	100	250	40

Overall Dimensions, Resistor 4000W – IP20

16.4.2 Braking resistor wiring diagram

Wire the braking resistor to terminals B1 and B2 on the inverter as short as possible.

Power terminal wiring (0.4 ~ 7.5kW)

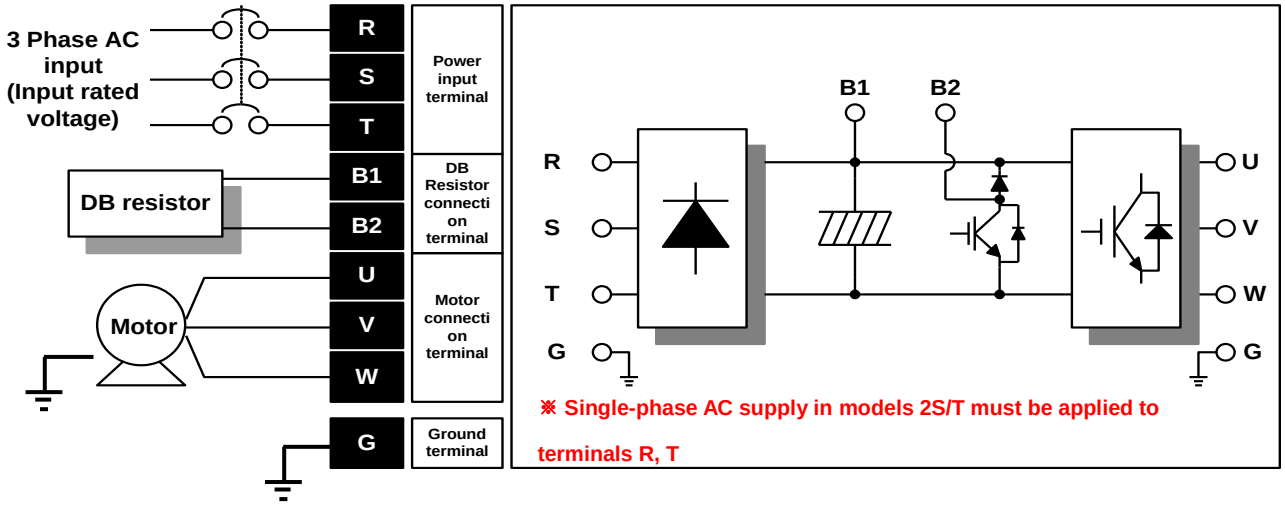
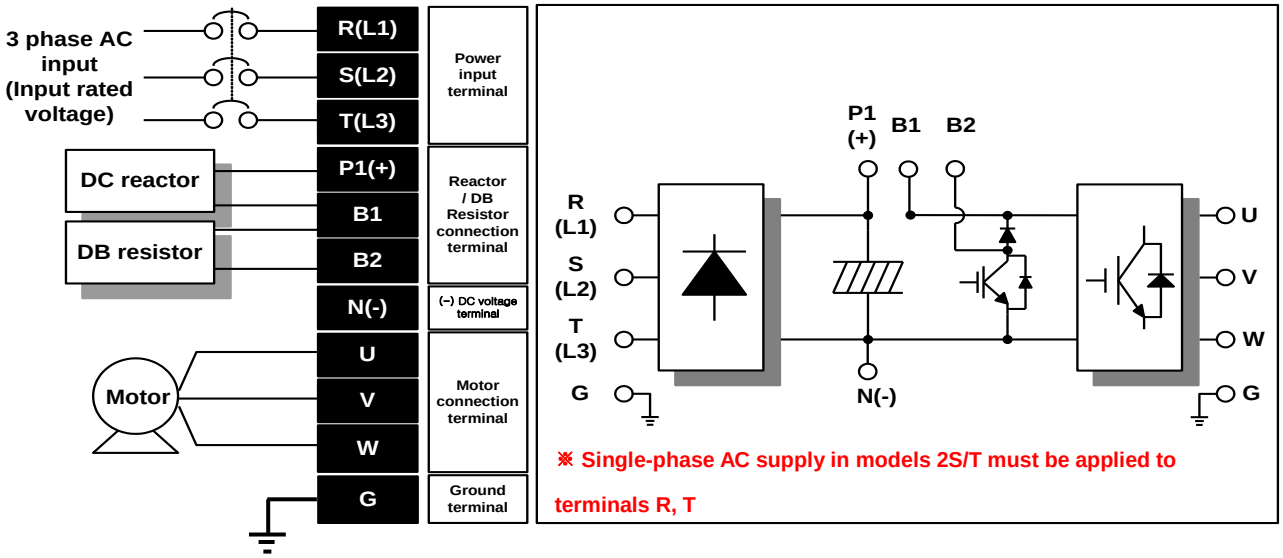
Power terminal wiring (11.0 ~ 22.0kW)